Journal of Housing
January 195

THIS "GALVAWARE" CAN AND COVER HAVE BEEN CERTIFIED FOR THE PHA CONSOLIDATED SUPPLY CONTRACT FOR THE FISCAL YEAR, BEGINNING JULY 1, 1958 —NO BID INVITATION REQUIRED

EXTRA HEAVY FOR LONG LIFE

Manufactured to Government Specifications RR-C-82a and Amendment 1 of 11-14-57— 32 Pound Can and Cover—24 Gallon Capacity

WE ALSO MANUFACTURE A COMPLETE LINE OF HOT DIPPED WATER PAILS AND WASH TUBS, GARBAGE PAILS AND ASH CANS—SEND INQUIRIES DIRECT TO OUR FACTORY

THE CINCINNATI GALVANIZING CO.

CINCINNATI 32, OHIO

How the structure of metropolitan governments affects quality, quantity, and price of HOUSING

. . . with suggestions for reorganizing government to improve housing for all groups

Here are challenging and provocative ideas that will inspire new thinking for everyone interested in the relationship between problems of metropolitan government and problems of housing. Persons concerned with programs of urban development, neighborhood rehabilitation, housing, local and metropolitan government, race relations, planning, etc., will welcome this frank and informative discussion.

Just Published

GOVERNMENT and HOUSING in METROPOLITAN AREAS

By EDWARD C. BANFIELD, *Associate Professor, and* MORTON GRODZINS, *Professor and Chairman, both of the Department of Political Science, University of Chicago*

177 pages, 6 x 9, illustrated, $6.50

In three major sections it explores the nature of the problem of metropolitan government organization and why so little has come of many schemes to reorganize it . . . analyzes the views of informed persons . . . examines the major remedies proposed for the ills of metropolitan government as they bear upon the housing situation. The conclusions and recommendations set forth point the way to a more effective approach to the problems.

ACTION

First book in the **ACTION** *Series in Housing and Community Development*

10 DAYS' FREE EXAMINATION

McGraw-Hill Book Co., Dept. JHS-1
327 W. 41st St., New York 36, N. Y.

Send me Banfield & Grodzins' GOVERNMENT AND HOUSING IN METROPOLITAN AREAS for 10 days' examination on approval. In 10 days I will send $6.50, plus few cents for delivery costs, or return book postpaid. (We pay delivery costs if you enclose remittance with this coupon; same return privilege).

(PRINT)
Name .....

Address .....

City & Zone ..... State .....

Company .....

Position .....

For price and terms outside U.S. write McGraw-Hill Int'L. N.Y.C. JHS-1

Personals

JAMES W. GAYNOR,
a former executive director of the New York City Housing Authority and more recently a private management consultant in Denver, has been named New York state housing commissioner by Governor Rockefeller. Mr. Gaynor, whose appointment came on January 5, succeeds Joseph P. McMurray, commissioner for four years under the Harriman administration. Mr. Gaynor left his city housing post in 1950; last year he was engaged by NYCHA as a consultant on its management operations (see March 1958 JOURNAL, page 99). As a follow-up on voters' okey last fall of a referendum making available 100 million dollars in state funds for loans to private builders for middle-income housing construction, Mr. Gaynor's appointment is expected to signal greater private investment in the state's housing program.

JAMES V. CUNNINGHAM, JR.,
executive director of Chicago's Hyde Park-Kenwood Community Conference, moves into a new job with ACTION-Housing, Inc. as associate director for community relations, effective March 9. In Pittsburgh and adjoining Allegheny County, site of the ACTION group's operations (see March 1958 JOURNAL, page 76), Mr. Cunningham will be working to duplicate his Chicago success in bringing citizen participation into urban renewal and neighborhood fix-up programs. He leaves the conference well along in its role as a partner in the renewal of the south-side area and on its Section 314 demonstration grant project—out to define the potentials for citizen participation in renewal (see page 23).

FLOYD G. RATCHFORD,
recently returned from Iraq (see page 10 and November 1958 JOURNAL, page 355), has been named director of urban renewal for Vancouver, Washington. Mr. Ratchford will be working on a program involving clearance of some 60 acres of old housing to make way for light industry and commercial reuse.

WILLIAM R. EWALD, JR.
has taken on the job of assistant commissioner for technical standards of the Urban Renewal Administration. In announcing the appointment, URA Commissioner Richard L. Steiner noted that, "Mr. Ewald brings to his new position a broad and varied experience which should be most valuable to federal, state, and local agencies . . . administering the nationwide program of urban renewal." From July 1955 until his appointment in December, Mr. Ewald was chief of development for the Arkansas Industrial Development Commission—responsible for bringing new industrial money and plants into the state. In that post, he directed planning and engineering reports, created the commission's national and state advertising, and developed the organization's communications program. Mr. Ewald also

NEW WAY TO

Prevent Faucet Leaks!

★ **9 out of 10 washers are fastened with screws that are TOO LONG or SHORT. The screws quickly loosen; the loosened washers are destroyed thru grind and squeeze of opening and closing faucets.**

34 years of research uncovers new solution

★ **Now, NEW (Patented) 'Sexauer' SELF-LOCK Monel screws, with an imbedded expanding NYLON PLUG, lock at the required depth AUTOMATICALLY, hold washers FIRMLY! Made of rustproof, noncorroding Monel, heads don't twist off, screw slots don't distort. They are easily removed when necessary, can be re-used repeatedly.**

★ **Used with NEW 'Sexauer' EASY-TITE faucet washers, they make a combination that outlasts past faucet repairs "6-to-1"! EASY-TITES are made of super-tough, pliable du Pont compound (neither rubber nor fibre) and reinforced, like a tire, with a vulcanized layer of Fiberglas. They resist distortion and splitting from shut-off grind and squeeze.**

Hidden costs of faucet leaks!

Faucet leaks are costly! As authenticated by Hackensack, N. J. Water Co. and American Gas Association, stopping just ONE PIN-HOLE SIZE (1/32") LEAK can reduce water waste 8,000 gal. quarterly. If a HOT WATER FAUCET LEAK, water and fuel savings JUMP to over $7.58 QUARTERLY—plus additional savings on MATERIALS, LABOR and costly FIXTURE REPLACEMENTS!

NEW SELF-LOCK screws and EASY-TITE faucet washers are just TWO of the "SEXAUER" line of over 3000 TRIPLE-WEAR plumbing repair parts and Pat'd. precision tools.

A "SEXAUER" Technician in your vicinity will make our NEW 126 page Catalog "H" available. He will gladly consult with you regarding a SURVEY of your plumbing fixtures to determine correct repair parts required and establish reasonable stock levels that avoid both overstocking and shortages—thus providing for efficient stock arrangement and control—all without obligation. WRITE TODAY!

J. A. Sexauer Mfg. Co., Inc., Dept. J-19
2503-05 Third Ave., New York 51, N. Y.
Gentlemen: *Please send me a copy of your NEW, 126 page catalog "H."*

My Name _____ Title _____
Company or Institution _____
City _____
Zone _____ State _____

SEXAUER
WORLD'S LEADING SPECIALISTS IN

WANTED
USED REFRIGERATORS AND RANGES
NATION WIDE SERVICE
We are experts on disposal procedure
AJAX APPLIANCE CO.
9602 Ditmas Avenue **Brooklyn 36, N. Y.**
Phone: HYacinth 8-6121

PLUMBING *Replacement* **PARTS**
SEND US YOUR SAMPLE
★Kohler ★Briggs ★American-Standard
★Speakman ★Crane ★Chicago Faucet Co.
★Sloan Valve ★Eljer ★Republic ★Watrous
—and ALL OTHERS
WE DUPLICATE OBSOLETE PARTS
BEST MANUFACTURING CO.
8750 CAPITAL OAK PARK 37, MICH.

set up the organizational structure, administered, and staffed the program and was in charge of negotiations that resulted in the location in Arkansas of industrial plants worth millions of dollars. In Baltimore, Mr. Ewald served for four years as assistant manager of the new industry location division of the city's association of commerce.

CLARENCE L. ROBINSON,
chairman of the Youngstown Metropolitan Housing Authority, was honored on November 13 with a testimonial dinner called by some 500 friends from all walks of life, gathered to eulogize "one of Youngstown's most respected citizens." An attorney, Mr. Robinson heard a score of civic, political, judicial, and religious leaders cite his many civic and human relations achievements during over 40 year of active participation in community affairs. Heading the list of speakers was J. Ernest Wilkins, former assistant secretary of labor, who compared Mr. Robinson's life to that of Lincoln's . . . illustrating "what can be accomplished in America if one has the right ideals and principles." In another speech, Youngstown's mayor noted that Mr. Robinson was honored not because or in spite of his being Negro but simply because of his many contributions to the community. "Youngstown stands foremost in the field of human relations," a credit, in large measure, to Mr. Robinson, he said.

The general counsel and secretary-treasurer of the Wilkoff Company, Mr. Robinson received the John H. Chase award for outstanding work in the field of race relations during 1946. Besides serving the authority, he has been a member of various citizen groups working on community projects and on special municipal study committees named by the mayor. Mr. Robinson also served for 10 years on the city's park and recreation commission and in 1953 was a member of Governor Frank Lausche's Ohio Sesquicentennial Committee.

The gathering of friends from all parts of the country presented Mr. Robinson with two bound, leather volumes containing telegrams and messages from scores of well wishers, among other gifts, plaques, and testimonials. Also, old friends of the authority chairman, including a former teacher, former employers, old classmates, and members of his church, joined in presenting a skit covering highlights of Mr. Robinson's life, based on the TV program "This Is Your Life."

BETTE JENKINS,
director of research, information, and statistics for the Detroit Housing Commission, left the agency as of late last year to take on a new "job" . . . as Mrs. Robert Callard; her new home is Painted Post, New York, near Corning, where her husband is a chemical engineer with the Corning Glass Company. Going into her fifteenth year as a NAHRO member, Mrs. Callard has an outstanding record of Association service on local (Great Lakes Chapter), regional, and national levels. She has been the JOURNAL's reporter for the North Central Region for many years and has prepared a number of special reports for NAHRO both for JOURNAL publication and for other purposes. Mrs. Callard plans to continue as a member of the Joint Committee on Housing and Welfare sponsored jointly by NAHRO and the National Social Welfare Assembly.

DR. EDWARD W. COLBY
took a new position in October as state health officer for New Hampshire. Dr. Colby formerly headed the Portland, Maine health department. He presently serves as a member of NAHRO's Redevelopment Section committee on conservation and rehabilitation.

GEORGE BIRO,
LOUIS BENEZRA
have taken on new duties as a part of the reorganization of the New York City Housing Authority that began last spring (see November 1958 JOURNAL, page 377).

Mr. Biro has been named director of a new administrative methods division. The unit is charged with responsibility for carrying out "continuous management research" and making recommendations designed to improve all phases of authority operations. In effect, it centralizes the operations study function previously carried out by specialists assigned to various departments. Mr. Biro, a veteran of ten years with NYCHA and a member of the executive committee of NAHRO's Middle Atlantic Regional Council, formerly served as the authority's assistant secretary.

Mr. Benezra, former chief of the office services division, has been appointed director of a new department of general services. A result of a combining of the purchase and general services divisions, the department is expected to eliminate overlapping of responsibility and duplication of work, leading to greater economy and efficiency.

ROBERT C. WEAVER,
New York state rent administrator under the Averell Harriman administration, has been succeeded by Joseph J. Caputa. Appointed by Governor Rockefeller on January 10, Mr. Caputa brings broad legal experience, both in New York City and abroad, to his new job.

RECENT DEATHS—
Frederick C. Shea, executive director of the Stratford, Connecticut housing authority, on October 27. Mr. Shea, 64, was killed instantly when struck by a train in Fairfield.

Nick J. Smith, chairman of the St. Paul housing and redevelopment authority, in June. Mr. Smith was the secretary-treasurer of a union local in St. Paul.

For Steel Swings—Climbers
Slides—Merry-go-rounds
"ASK PACKER"
STAR COMPANY
Litchfield, Mich. • LIncoln 22022

Journal of Housing

January 1959
Volume 16—Number 1

Publication of the
NATIONAL ASSOCIATION
OF HOUSING AND
REDEVELOPMENT OFFICIALS
1313 East Sixtieth Street
Chicago 37, Illinois
John D. Lange, Executive Director

Subscriptions to the JOURNAL OF HOUSING are $5; also available through membership in the Association at the rate of $12. Individual copies, 50 cents; special issues, $1. Entered as second class matter October 25, 1944, post office, Chicago, Illinois, under Act of March 3, 1879. Issued monthly except August.

Editor: Dorothy Gazzolo. **Assistant Editor:** Lorraine Ulrich. **Editorial Associate:** Richard Solano. **Advertising Manager:** R. M. Trevett. **Regional Reporters:** *Middle Atlantic,* Robert Moyer, Baltimore; *Southeastern,* George L. Davis, Atlanta; *Southwest,* Marie C. McGuire, San Antonio; *Pacific Northwest,* Rose Morry, Seattle; *Pacific Southwest,* Mrs. Delores Ramey, Richmond. **Cover:** John Bradford.

COVER—

It is by popular demand—so many readers have wanted to know who he is—that John Bradford, JOURNAL cover artist, is featured on this month's cover. Mr. Bradford, an advertising artist with Marshall Field & Company of Chicago, through his artful cover designs, has been winning attention and a good number of awards for the JOURNAL since 1952. Photograph that was adapted for cover use this month is by Vic Skrebneski, also of Chicago, a free-lance photographer, most of whose work is done in the fashion field.

CONTENTS—

Changes in Housing and Home Finance Agency command announced as Congress gets moving on omnibus housing legislation *page 7*

A tale of two countries: Spain and Iraq

Part I: Spain—by Bleecker Marquette

Part II: Iraq—by Floyd Ratchford *page 8*

Design, not dollars, figures in competition for redevelopment land in Philadelphia *page 13*

Garden clubs organized in Norfolk low-rent projects are making both public housing and the entire city a more attractive place in which to live *page 14*

President's Corner *page 17*

T&M: Thomas R. Kelly describes "the how" and "the why" of boiler water treatment *page 30*

News Notes

AIA BACKS AUTONOMY OF HOUSING AUTHORITIES, ARCHITECT'S ROLE

A firm stand on local "ownership" of housing authorities and greater autonomy for the architect's role in public housing came out of a fall meeting of the board of directors of the American Institute of Architects. The board, meeting in Clearwater, Florida, passed a resolution noting "that the AIA's support of the incumbent administration of PHA be dependent on production by that agency of contracts and schedules of fees consistent with sound professional practice and adequate service and ... PHA's effectiveness in assigning the role of the owner to the local authorities and the role of architect to the architect..." Changes are needed to "preserve the original concept of the (public housing) program," notes a report on the resolution appearing in a December AIA newsletter. This report also indicates that the statement on the architect's role culminates long-time efforts to convince Public Housing Administration officials of the need for proper architectural contracts and compensation. Now, says the report, "the Board is convinced that the time has come for the AIA to take a firm stand."

HUMAN VALUES IN URBAN LIVING SUBJECT OF CONFERENCES, STUDY

How can cities better serve human needs? What do people like and dislike in urban living? What are the implications of early urban cultures on today's city?

These are among questions posed recently in conferences and studies focused on the failure of cities to provide for "human needs" and on how these failures can be corrected in the future as cities rebuild their slums and blighted areas.

1—"Creative Trends in Urban Building" was the theme of the Fourth National Construction Industry Conference held in Chicago in December (see November 1958 JOURNAL, page 356). The tone and challenge to the conference was set in its first session on "Human Needs in Urban Society." A sociologist, an educator, a psychiatrist, and an

architectural magazine editor made keynote addresses. Their view, in general: a dismal picture of cities not meeting the needs of their residents. Speakers' chief contention was that city building technicians are more interested in technical than in human needs. The result, noted keynoters: "sterile masses of glass and metal" and over-technical attitudes toward solving urban problems—attitudes that develop perfect solutions "except that people are always getting in the way." Also: patchwork compromises with what planners "believe" to be human needs; planning that omits the individual. Among future requirements cited: facilities to channel human aggressions. Dr. Karl A. Menninger, director of Topeka's famed Menninger Clinic, noted that mankind has intrinsic aggressive drives that must be provided for, channeled, guided in planning the ideal physical environment. And answers do not lie in merely providing sidewalks, parks, shopping centers, said Dr. Menninger. The increase in the "oldster" and general population; heightened mobility and traffic; diminishing working time and effort—long considered helpful in harnessing aggressive impulses; the "tremendous" increase in leisure time, "for which many people are not prepared," calling for greater facilities, counseling—all are factors that must be recognized in planning cities for human needs, according to Dr. Menninger.

2—Chicago and Chicagoans will go under the microscope during the next five years in a University of Chicago study that's slated to uncover information on what residents think of their city and metropolitan area. A Ford Foundation grant is financing the study, to be carried out by the National Opinion Research Center. Specifically, interviewers will be probing for answers on the needs of people other than good housing . . . preferences as regards such things as walking to work, outdoor living space. Residents will also be tapped for views on why they came to the metropolitan area, what they consider good or bad about their housing and neighborhoods, and on the effect of city life on the family. Later study aspects are to cover the adjustment of migrants to the city, renewal methods, attitudes toward the integration of local governments in the metro area, and social and psychological aspects of the trend to the suburbs.

3—Yale's Christopher Tunnard, director of its city planning program and long-range, major research study on "Interurbia" (see May 1957 JOURNAL, page 153), looks to "beat generation" literature to provide a "new look" at cities. Speaking before the annual meeting of the American Studies Association of Texas, in December, Mr. Tunnard linked the "beat" writers to city planning. They are, he noted, making Americans "look at the city in a new way—much as Charles Dickens made people look at London." Their books and poetry convey a new "sense of the modern city," said Mr. Tunnard. And where some of the older writers rejected the city, their "new-school" predecessors "carry it comfortably with them wherever they go," partly, says Mr. Tunnard, because they have "accepted the city as a natural phenomenon alternately exhilarating and bewildering."

4—"Urbanization and Cultural Development" was the theme and the University of Chicago the site of a symposium held December 4-7 to explore the development of city life over the past 7000 years. The underlying premise behind the get-together, according to the U of C: that "the modern city . . . our greatest asset . . . and headache" can learn much from the cultural development of ancient cities and civilizations. Some 70 scholars from abroad and the United States gave the symposium historical perspective: Lewis Mumford linked the urban past with the present. In the symposium's opening speech, Mr. Mumford predicted the doom of the city in its present dimensions, terming it congested, inhuman in its center, and a hodge-podge on its outer fringes. To survive, he said, the city must change some of the methods of urban renewal in current use. Renewal methods criticized by Mr. Mumford in later discussions included the tearing down of sound and interesting old buildings; "getting rid of people before new quarters are built for them, creating new slums, overcentralization in planning, not listening to people, and overdense rebuilding." Among his positive suggestions: desegregate suburbs; persuade suburban communities to accept housing for former slum dwellers.

5—The University of Pennsylvania carries forward the emphasis on providing for urban "human needs" with the appointment of Lewis Mumford to the initial Ford Research Professorship in City Planning. Mr. Mumford will hold the professorship during the spring semesters of 1958-59 and 1959-60; during this time, he plans a complete revision of his book, *The Culture of Cities*. The research post was established in 1957 in the department of city planning under a grant from the Ford Foundation. Appointees will be distinguished authors, city planners, and scholars in fields closely related to city planning.

For Steel or Wood
FOLDING CHAIRS
"ASK PACKER"
STAR COMPANY
Litchfield, Mich. • LIncoln 22022

We will buy your
USED REFRIGERATORS AND RANGES
We pick up in all parts of the country and handle the removal details
BEACH REFRIGERATOR COMPANY
196-11 Northern Blvd. Flushing 58, New York
Phone: Flushing 7-6161
(Please place our name on your bidders list)

COMPETITION OPENS FOR 1958 COMMUNITY SERVICE AWARDS

Lane Bryant annual awards competition is again open to nominations for two awards of $1000 each, one to an individual and one to a group, for outstanding volunteer community service during 1958. In the past, housing and renewal con-

(Continued column two, page 12)

CONGRESS GEARS UP for housing; Cole resigns

Battle lines are forming in Congress: the newly-strengthened liberals, the middle-of-the-roaders, and the balance-the-budget-or-bust forces are each rallying their troops. What the changes wrought in the November elections will mean when it comes to cases is still anybody's guess. Senator Lyndon Johnson (D), Texas, Senate majority leader, has indicated that it will be the big-money omnibus housing bill that will be used to test the temper of Congress. As of mid-January, a number of housing bills had already been introduced in each house; hearings had been scheduled; and predictions were for floor action on housing before the end of February.

A Shift in Command

Meanwhile, with forces rallying for the ensuing fight, there came a shift in the Administration's housing command. On January 13, it was announced that Albert Cole, top man at the Housing and Home Finance Agency for the past six years, was resigning. Before the week was out, his successor had been named: Norman Mason, commissioner of the Federal Housing Administration.

Norman Mason

With the Administration housing bill already in the hopper, the change in HHFA cannot have too much impact on the 1959 legislative picture. And it was too early, at this writing, to tell, precisely, what implications the shift will have on the way housing programs will operate... But there are some clues to be gleaned from a look at the way Mr. Mason has performed as FHA chief.

Mr. Mason joined FHA in 1954 in the wake of the Section 608 scandals (see May 1954 JOURNAL, page 153). A former Massachusetts lumber dealer, he had little experience in the ways of officialdom... but he has throughout his FHA tenure appeared willing to learn. More than any other federal housing agency, FHA has relied on working with advisory groups as a means of keeping up on the housing situation. As could have been expected, FHA has, under Mr. Mason, been more than willing to listen to the home builders and other industry groups; what was not anticipated, however, was FHA's receptiveness to consumer-geared proposals from public interest groups, a factor that has figured, for example, in getting more flexibility and speed into the urban renewal functions of the agency; in the setting up of a new FHA program for the elderly; and in some significant changes in the cooperative housing program. Further, indications are that the door to the White House will be open more for the new HHFA chief than it was for his predecessor and that HHFA will be operated as more of a policy-guiding agency than as one whose primary function is to coordinate the work of all federal housing bodies.

Mr. Cole

Mr. Cole moved into the HHFA Administrator's Office shortly after President Eisenhower moved into the White House (see March 1953 JOURNAL, page 77). A former Congressman from Kansas, Mr. Cole was at first looked upon rather skeptically by public housing backers, for his record on Capitol Hill was anti-low-rent-housing right down the line. But in his six years with HHFA, Mr. Cole supported public housing more than was expected and backed up redevelopment with apparent conviction.

Albert Cole

NAHRO's President John R. Searles, Jr., credits Mr. Cole for having rendered "yeoman service" to his country. "We in NAHRO," Mr. Searles said, "wish Al Cole great success in his new position in private business. We hope he brings to it the flexibility, the energy, the buoyance, and the ability to grasp a situation quickly that he used so fully during his years as Housing and Home Finance Agency Administrator. Al's voting record in Congress worried some of us when he first became the Administration's chief housing official," Mr. Searles continued, "but he soon proved conclusively that he was a real champion of genuine renewal of our cities."

Mr. Cole leaves the federal service for a position as executive vice-president with Reynolds Aluminum Service Corporation. The fact of Mr. Cole's resignation came not so much of a surprise (it had been rumored fairly often over the past year) as did the timing—just as the wheels were beginning to roll on Capitol Hill.

The Bills

What's happening on Capitol Hill is this: three major housing bills—each representing one of the significant influences taking shape in Congress—have been introduced. The bill introduced in the House by Congressman Albert Rains (D), Alabama might be said to be the "liberal" measure (it more or less follows the line that has been taken by NAHRO, the National Housing Conference, etc.); the bill introduced in the Senate by John Sparkman (D), Alabama, the "middle-road" measure; and the Administration bill, the "conservative" measure. Hearings on omnibus housing legislation are to start on January 22 in the Senate and during the week of January 26 in the House; how some of the crucial issues that will be debated are treated in each of the major bills already in is indicated below.

Public housing: The Rains bill, which Speaker Sam Rayburn (D), Texas, has said will get top-priority treatment in the House, calls for 35,000 units a year until a remaining 400,000-unit authorization of the 1949 bill is used up; Sparkman —35,000 units for each of two years; the Administration—mum.

Urban renewal: Rains—500 million dollars a year for three years; Sparkman—350 million dollars a year for six years; the administration—less than either, 100 million dollars for the next year, plus 100 million for use at the President's discretion.

FHA: All bills would increase mortgage-insurance authority.

In exotic Iraq, practical new housing is beginning to make a showing . . . but the country still has a long way to go in solving its housing problems. In the picture at right is a general view of what is known as the "Surchinar housing scheme," which has provided 400 units for the staff of a cement factory.

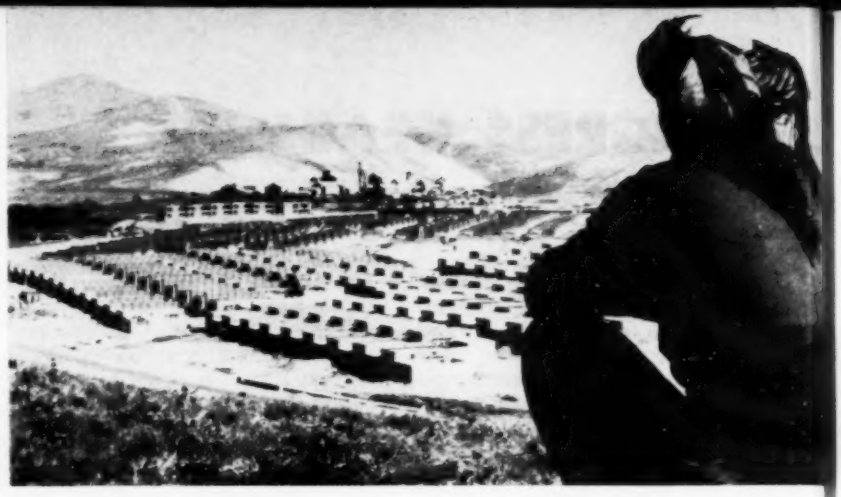

While Spain is making some headway with housing, particularly in the big cities, many people still live in comparatively primitive housing. Woman in the picture above is standing in the doorway of her "cave" dwelling in the Canary Islands. The unit has four rooms and electricity is soon to be installed.

TALE OF TWO COUNTRIES: SPAIN, IRAQ

Two long-time NAHROites—Bleecker Marquette, consultant to the Better Housing League of Cincinnati, and Floyd Ratchford, renewal director for Vancouver—have prepared for the JOURNAL *papers on their impressions, with emphasis on housing, of life and times in two countries: Spain and Iraq, respectively. Mr. Marquette's observations were made while spending several months in Spain during late 1957; Mr. Ratchford's while on the job in Iraq last year for Doxiadis Associates. It is the* JOURNAL'S *feeling that the stories, taken together, make an interesting study of the way two vastly different countries are handling some similar problems.*

PART I: SPAIN, by Bleecker Marquette

True, Spain is a relatively backward country. But it isn't as far back as many people think and things are being done—even under the dictatorship that none of us like.

Economically, the country is handicapped by its hilly topography, its lack of rain (even when it rains in Spain it usually does *not* rain in the plains!), its denuded hillsides, its primitive agricultural methods, its retarded industrial development. The frightful three-year Civil War (1936-1939), the loss of its gold following the war (it was taken out of the country, mostly to Russia and Mexico by the Republicans), the nation's isolation, and 'ts dictatorship haven't helped any. But the situation is not hopeless.

The Spanish people are charming, among the best looking and most courteous in Europe. Despite their leisurely pace, they are neither lazy nor stupid. Things are being done, too. They are building schools, hospitals, roads, and houses about as fast as their limited resources will permit. The country lacks modern equipment and most of the essential building supplies. There is land enough on the outskirts of cities and no trouble about the cities annexing any land they care to. But they can't spread as they would like to because they haven't machinery for laying underground utilities.

The Problems

Inflation is certainly one of Spain's toughest problems. Perhaps the next most pressing challenge is education. There is a serious lack of schools and teachers. Many children get very little schooling. Even

so, I am not at all sure that housing isn't the chief worry. The shortage is appalling . . . and so is the overcrowding. There is a lot of doubling up. Young couples often have to wait as long as seven or eight years to get married because they can't find a place to live. The average age of marriage is now 32 years —a condition that Senor Fonseca, head architect of the ministry of housing, told me is primarily the result of the dearth of shelter.

But Spain is seeking to do something about its housing problems. For one thing, there is now a ministry of housing, whereas there is still no ministry of health. The goal is building 100,000 units a year but, because of the materials problem, the target has not been hit during either of the past two years: it has not been possible to put up more than 65,000 units annually.

Housing Help

Most of Spain's housing (and it is practically all high-rise) is government-aided. There are three classes of aided housing. The most expensive gets the least assistance, the least expensive the most. The principal form of aid is government loans. The expensive housing gets a 25 per cent loan without interest; the cheapest gets a 50 per cent non-interest loan. Both types get additional 30 per cent loans at low rates of interest. Both are free from most taxes. The preferred class gets priority on building materials, which is a very important advantage.

About one-third of the units going up are not in any of the three aided classes at all but in the highly subsidized public housing program, which the Spanish call "social housing." The rooms are pitifully small and the construction shoddy, so that one wonders whether, as a result of the attempt to build fast at the lowest possible cost, there won't be some new blighted areas to plague them before long.

There isn't much private building for two reasons. One is the scarcity of materials and their high cost on the black market (and there is a very lively black market). The other is rigid rent control. Two professional people I know were each paying only $10 a month for eight-room apartments in good, if not the best, locations. Everybody "stays put" if he can, because to move (and it is extremely difficult to get another apartment anyway) means losing some of the advantage under rent control. Under the circumstances, private investors find it "hard going."

Two things about housing in Spain are especially notable. One is that so much of the new housing is for the poor and, so far as I could learn, no one objects. The other is that practically all of the units are being bought by the occupants—even the social housing. And incidentally much of the new private construction is well-designed and attractive.

Regulations for the maintenance of existing dwellings are sketchy and not well enforced. Owners getting meager rents can't very well be forced to do much repairing. The codes for new buildings stress, not as ours do, safe and solid construction but rather rigid limitation on the use of materials.

In Contrast . . . U.S.A.

For our part, we may have misgivings about Spain's uneconomic rent control and about the less than desirable construction standards. But Senor Fonseca, who let me read his observations on housing in our country, can't understand why, with our wealth and unlimited building supplies, we still have slums, can't build enough middle-income housing, and have such violent opposition to providing for the most needy. He told me that 60 per cent of the income of the Spanish government goes for housing. I came away feeling not too critical of Spain . . . nor too proud of our achievements, housing-wise.

An over-all view showing some "cave dwellings" in the Canary Islands. Author Marquette says they are not "so bad as you might think."

A TALE OF TWO COUNTRIES . . .

PART II: IRAQ, by Floyd Ratchford

I find it very difficult to put in writing a record of my experiences during a short sojourn in Iraq last year. Perhaps, had I been able to complete my two-year assignment without the interruption of a "revolution," a more sane and comprehensive report would be possible.

Mrs. Ratchford and I left Vancouver on January 1, 1958 for Washington, D. C., as the first phase of a flight to Baghdad, Iraq . . . via Athens, Greece. After months of negotiations, I had signed a contract with Doxiadis Associates of Athens. This firm specializes in rendering architectural, planning, and engineering services. They have contracts with various governments throughout the Middle East and elsewhere.

My assignment, according to my contract: to serve as a "Management Expert." This title somewhat scared me, since, during all my years in housing, I had met a considerable number of experts in various fields and I did not feel that this classification quite fitted me. It was reassuring, however, to reflect upon these two basic facts: I would be away from home . . . and in a foreign land. If I couldn't be an "expert" under these conditions, then I could never expect to earn such a title. Seriously, if one accepts an assignment in a foreign country, he or she must know at least the rudiments of a profession or be found out very shortly. But I had another out: a revolution occurred in July and I had to return home before anyone could catch up with my many shortcomings.

The Job

In the Doxiadis firm, during my association with it, only a young landscape architect named Rudolph Platzek and myself were Americans; the others were Greeks or Iraqis. I was assigned an assistant, George Stratakis, a graduate attorney, a Greek. He had been in Baghdad for over a year. His wife was also an employee of the firm: grand people, both of them. It was our assignment to recommend a program for the sale or rental of housing being built by the Iraqi government. As of last year, there had been more than 25,000 units constructed in various parts of Iraq. Units built near factories or manufacturing plants were planned for rental; those elsewhere, for sale. In all instances, some form of government subsidy is involved, since the actual costs of land, utilities, planning, and construction far exceed the amount that families needing housing can afford. What's been done so far is the beginning of what I am sure will be a vast program of housing for Iraq. It is my sincere hope that the program will be carried out by the present government on an even better scale.

Housing of the best quality in the Middle East is of masonry construction. The housing that presently provides shelter for more than half of the population consists of mud huts, known as *serifas*. Any improvement in the country, housing-wise, is therefore desirable.

Space Problems

The houses presently completed under the government program are 50 per cent of a two-room size; a few contain more than three rooms. The need for more space I believe to be imperative. In recent population survey reports, the average size family shown for Iraq is misleading. When the census was conducted, the enumerators insisted upon knowing the size of the immediate family, not of the tribe to which the family is connected. Yet, since it is the custom in Arab countries for male offspring, when they marry, to bring home the bride, family composition poses a much greater space requirement problem than the census figures might reveal. If housing is to play a significant part in the social evolution of Iraq, space standards for adequate living must become a part of the housing picture. While it is agreed that provision of sanitary facilities, water, and electricity is important, allowing space for separation of the sexes is likewise important. There is little use in providing a better standard of gross overcrowding if good housing is the objective.

Land

The multiple-unit housing being built by the government is another aspect of the program with which I thoroughly disagree. Such housing provides for the glorified slums of tomorrow . . . and, believe me, I mean tomorrow. If land were scarce, as is the case in some European countries or in our larger urban centers in America, there might be some justification for concentration. To build such housing in Iraq is, I believe, unjustifiable; land is what Iraq has the most of. It has been said that the people like to live in such close quarters. This statement can not be substantiated. When a house is built by an Iraqi of some means for himself, invariably it is a large house: a single-family unit with ample garden space, etc., which indicates to me that space, both inside and outside, is important to all people, whether in Iraq or elsewhere. Why then settle for a quarter loaf when a half can be provided just as easily?

Rural Housing

There are, or I should say were, several different types of housing aid being given in the program that is being undertaken by the Iraqi government. The first form of assistance was for a rural housing program, under which whole villages were being started. Under a land reform act, acreage was being allocated to the people after the land was irrigated. As is the case in many European countries, the farmers live in villages close to their land. This pattern dates back to the days when by living close together, the people could better defend themselves from marauders or from enemy attacks. Such rural housing "schemes," as they are called over there, are known as "Firm Foundation Housing." What is provided is just what the term implies: foundations are poured for the houses and all the underground plumbing and sewer connections are made; then this shell is sold to the farmer, who completes the house with advice from qualified helpers. Results of this program can not be reported, since it is an entirely new one.

Urban Renewal

Urban renewal (called "amelior-

ation" in Iraq) is going forward both in Baghdad and Mosul in a very limited way. Here, too, not much can be reported, since it is a new program and was barely under way in Baghdad's older section and only the census material had been obtained in Mosul at the time of my service in Iraq.

Experiments

An important feature of the housing program in the Baghdad area was the experimental work being done. Twenty contractors each built an experimental unit, all identical in size, but constructed of different materials. The costs varied considerably among the units, since some were made of native brick, some of concrete blocks, others of precast slabs, etc. Other features of the houses also differed, such as types of insulation, etc. These houses were to be checked at regular intervals over the next ten years to try to determine which withstand the climate best and to serve generally as a guide to possible future improvements. Also, a testing laboratory had been established called the "Eckestic Center" where all types of materials were to be tested to determine their suitability to climate, local customs, etc.

The People

Now, something about the people of Iraq. For the most part, they are pitifully poor. Their lives revolve around a continuous circle of want. These wants are basic: food, shelter, and clothing. Of course, our wants follow a circular pattern, too, but in the Middle East, it is only the stark necessities that count. They see all our new machines, refrigerators, clothing, etc., but, without income, these goods are unattainable. I compare these people to someone walking back and forth before a restaurant, smelling the food and desperately wanting it but unable to purchase. It is surprising that the impoverished Iraqis have not taken from those who have by force long ago. But they, for the most part, respect authority and respect what belongs to another. Petty stealing is prevalent both in Iraq and elsewhere in the Middle East but we, in America, have our share of thievery, running the whole gauntlet . . . and without the excuse or temptation that daily confronts these millions of poor people.

The Arabs are traders. They love to bargain and will haggle over price for hours if a customer will join in. It's part of their way of life. An Arab takes advantage of another Arab in a business transaction as a matter of course. He will treat a foreigner the same way. If you pay the first price asked, so much to the good, from the Arab's point of view. But if you buy the goods for half the initial asking price after haggling, the Arab thinks none the less of you and you part with mutual respect. If by chance you can get the article for less than half of the first asking price, the Arab will respect you even more.

Baghdad is a contrast in the very old and very new. The old city of Baghdad, from the circle where Saadoon Street begins west, on both the north and south side of the Tigris River, is truly old. This part of the city is a different world than the one we as westerners are accustomed to. Narrow streets; crowds; children seeking *bakshees* (tips) for carrying parcels; beggars both men and women (women squatting against buildings begging and nursing babies is not an uncommon sight); the blind, crawling sightless and barely alive; smells of urine, of animals, of people living in places less desirable than we provide for our domestic animals and not nearly as good as those we offer our dogs and cats—all this is a part of Old Baghdad.

Speaking of dogs reminds me that there are more dogs in Baghdad than, perhaps, in any city in the world. They are called "Pi" dogs and resemble our northern huskies, except in color, which is tan. They belong to no one and exist by hunting food from garbage cans, competing with the *serifa* dwellers in trying to get to the

At left, in the picture above, is Constantine Doxiadis, who represents something new on the international "technical assistance" scene: he was brought to the United States from Greece late last year to give advice to Washington, D. C. . . . a switch in the usual pattern. Mr. Doxiadis (he heads the firm by whom Floyd Ratchford, author of the article on these pages, was employed when in Iraq), took advantage of the occasion to observe and comment on what's happening in other American cities, too. Something he liked: Norfolk's kind of big-thinking redevelopment (see November 1958 JOURNAL, *page 373). Something he didn't like: exodus of city dwellers to subdivisions that look like "clossal nomadic" camps. Something he considers important for renewal: strong central bodies to handle the job. Pictured with Mr. Doxiadis, above, is Walker Mason of the Housing and Home Finance Agency.*

foreigners' garbage before the garbage pick-up wagons.

Social Progress

Iraq had a compulsory educational program when I was there but the law with respect to attendance was not being enforced since there was an insufficient number of teachers available to man the schools, even though there were enough facilities. Only through education can this country or any other Middle East country hope to achieve any degree of progress. Teachers must be trained at home and abroad in large numbers or, as will be done by the new government, must be imported from such lands as Egypt. Western teachers cannot be brought in, even with Iraqi consent, since the language barrier makes the program impractical. Foreign help can take the form of teaching the teachers. This program is especially important in imparting working skills. Three vocational schools had been opened in Mosul, Baghdad, and Basra during my stay. We attended the graduation ceremonies held in the spring at the Baghdad Vocational Center, where some 60 young men received their diplomas as carpenters, masons, electricians, and plumbers. The number of trained or skilled craftsmen is still pitifully small. Every new manufacturing plant must begin with foreign help, who, in turn, must train the natives in the necessary skills for the manufacture of goods.

Strides have been made and are still under way on health programs. Here again, because of the very low standard of living for the masses, the process is slow. Sanitation, more and better hospitals, more doctors and nurses, are crying needs today. Such programs cannot be completed in any forseeable future.

U. S. Role

Our government has, in the past, and is still supplying technical assistance to Iraq, which I believe should be our goal in aiding these people. Revenue from oil will supply the Iraqi government with the money necessary to provide the physical necessities for progress. We, in America, with all our plenty, have a responsibility to help the people in underdeveloped countries but such help must be given in the framework of their laws, taking into account their religions, customs, and traditions.

NEWS NOTES—*(Continued from page 6)*

nected individuals and groups have been honored by awards and honorable mentions. In 1950, the Hyde Park-Kenwood Community Conference of Chicago and the Reverend R. Norman Hughes, of Bay City, Michigan received honorable mentions. In 1952, the Coconut Grove Citizens' Committee of Miami, Florida came in for a similar honor and in 1956 the Allegheny Conference on Community Development of Pittsburgh received the top group award. As in the past, the number of nominations from any one person or organization is unlimited; all nominations and a 200-word statement on the candidate's activities must be submitted before March 15, 1959. Write for information and nomination blanks to: Lane Bryant Annual Awards, 465 Fifth Avenue, New York 17, New York.

SECOND COOPERATIVE HOUSING CONFERENCE SET FOR MARCH

For the second year running, NAHRO, the Cooperative League of the USA, and the National Housing Conference are joining efforts as co-sponsors of the Second National Conference on Cooperative Housing. Set for March 10-12 in Washington, D.C., the conference is to devote particular attention to the role of cooperative housing in the over-all programs of urban renewal and redevelopment. The meet will follow on the heels of NHC's annual meeting; NHC delegates are invited to stay over and participate in the co-op sessions, to be held at the Statler Hotel. Write to the Cooperative League of the USA, 1025 Vermont Avenue, N.W., Washington, D.C. for conference information and reservations.

INTEREST RATES DIP ON HOUSING NOTES, REGISTER RISE ON BONDS

November and December sales of temporary notes to finance public housing saw a drop in the average interest rate after a brief upward spurt in preceding fall sales. On the long-term bond front, costs went up from the previous May 21 offering in a November sale.

On temporaries: in a November 18 sale, 78 housing authorities sold 85 issues totaling $191,924,000 at an average interest rate of 1.767 . . . as compared with the October 15 sale rate of 2.219. The range of interest rates was 1.59 to 1.97.

On December 9, 79 authoritie marketed 83 issues totaling $178 949,000 at an even lower rate that the above sale: 1.729. The interest rate range for this sale was 1.60 to 1.96.

On long-term bonds: 14 local housing authorities on November 6 borrowed $45,275,000 via long-term bonds, to mark the 22nd sale of such bonds and the third sale for 1958. Bonds are due from 1959 to 1999 and carry an interest cost of 3.3509. This average interest rate tops the May sale rate of 2.887 and represents the highest interest figure reached to date (see June 1958 JOURNAL, page 186).

URBAN RENEWAL PROGRAMS UNDER STUDY BY MAJOR BUSINESS GROUP

Business interest in urban renewal, and city and state problems in general, has turned up on a new front through the Committee for Economic Development, a nonprofit, business-supported organization. Set up in 1942, CED has been working to develop policies leading to national economic growth. CED interest in state and local economic problems manifested itself in the fall of 1957. At that time the committee created an area development division to look into problems of what it referred to as "the little economies," including questions related to city rebuilding. To guide the division's program, an advisory group was named composed of "experts" from a variety of fields tied to regional and local development. Among the experts: James E. Lash of the American Council To Improve Our Neighborhoods (ACTION); H. Ralph Taylor, director of the New Haven Redevelopment Agency and a vice-chairman of NAHRO's Redevelopment Section; Luther Gulick, president, Institute of Public Administration; and Paul Ylvisaker of the Ford Foundation, which has made a number of grants in support of metropolitan area research. Named to the division's staff was David L. Lutin, formerly field representative for the Urban Renewal Administration.

Last fall, the first product of CED's concern with state and city questions emerged through publication of a pamphlet on *The "Little" Economies* (see page 27). It contains six papers presented at

(Continued column one, page 18)

Portion of winning Webb & Knapp plan

Design, not dollars, scores in unique land contest

Beauty of the plan and not high bidding for land—that was the emphasis in a unique competition that has taken place for the rebuilding job in a 56-acre tract of Philadelphia's Washington Square East redevelopment project (formerly known as the Center City East-Society Hill project). The historic site, in a picturesque setting near famous Independence Hall, is expected to attract a lot of attention from visitors and Philadelphia decided it was worth sacrificing premium land prices for a bangup design job.

In order to eliminate price of land as a competitive factor, all contenders for the rebuilding job agreed to pay whatever official value is finally set for the land. The city worked up a schematic plan for what it wanted in the area —a blending of modern buildings and of whatever historical buildings could be refurbished and retained—and the contenders got to work. All together, the competing redevelopers hired seven of some of the best known architectural firms in the country and spent some $260,000 for preliminary site and architectural plans . . . a sum, it has been said, that "the city itself would never have spent for such professional services." "Winners" in the aesthetically-geared competition were announced early this month: (1) Webb & Knapp and (2) Thomas Jefferson Square Corporation, a firm headed by T. Roland Berner of New York City and including Jerome Rappaport and Seon Pierre Bonan, who are active in redevelopment in Boston and New Haven (see March and October 1957 JOURNALS, pages 96 and 342, respectively).

Philadelphia's "design not dollars" contest attracted a lot of attention from redevelopers. In addition to the winners, redevelopers who participated in the competition included James Scheuer-Roger Stevens, whose plan for the western half of the project had been coordinated with the winning Webb & Knapp plan for the eastern half; local builders Bernard Weinberg and Harry Madway, who jointly submitted one plan for the entire project area; and Turner Construction Company of Philadelphia and John W. Galbreath of Columbus, who, like Webb & Knapp and Scheuer-Stevens submitted two separate, coordinated plans.

According to *Architectural Forum*, Philadelphia's "design sweepstakes" produced some outstanding results. Said the magazine: "Not only did . . . emphasis on design draw some excellent proposals but the submissions served to clarify some unresolved issues." And, said *Forum*, "Architecture . . . gained a wholly new and important official status in the field of renewal."

Features of the winning Webb & Knapp plan include three 30-story high-risers contrasted with two-story row houses (architect: Ieoh Ming Pei) that are placed so as to permit views of the nearby Delaware River between buildings. The Thomas Jefferson Square Corporation's plan (by Harrison & Abramovitz, with Stonorov & Haws of Philadelphia as consultant architects), described by *Forum* as "lively and romantic," includes 496 units in three high-risers, 85 new single-family houses, 43 rehabilitated single-family homes, and rehabilitation of 58 units in multi-family structures. As an "extra," Jefferson Square included in its plans ideas for a later, second-phase addition to the project that include, in addition to more housing, a concert hall for which the corporation has formally declared its intention to donate a site.

Terms of the agreements between the redevelopers and the local redevelopment agency call, in part, for each sponsor (1) to use at least 1 per cent of his total construction costs toward "fine art" (e.g., sculpture, fountains, mosaics); (2) to restore all fronts of buildings certified as "historic" to their "historic character"; (3) to enforce an open-occupancy policy in new housing; (4) to begin construction by October 1959. Report is that, in order to meet a carefully worked-out time schedule for the project, the local redevelopment agency indicated a preference for conventional financing over Federal Housing Administration financing, which, it was felt, might cause delays and, possibly, some compromises on design and quality. The Thomas Jefferson group has agreed to finance conventionally and Webb & Knapp, while not entirely giving up FHA as a resource, has agreed to explore the possibility of using conventional mortgaging.

PROJECT GARDEN CLUBS MAKE NORFOLK NICE

By Frank T. Adams, Jr., Assistant Women's Editor, *The Virginian Pilot*, in which the article first appeared.

Throughout the United States, garden clubs are almost as numerous as the gardens they cultivate. Many of these clubs have claims to unique distinctions but very few can claim to be part of a city's organized redevelopment and slum clearance program.

Fourteen garden clubs in the city of Norfolk *can* make that claim; they are an integral part of a sweeping effort to revamp the face of the city. How these 14 clubs became a part of such a vast undertaking is a very interesting story.

Enfolded within the organizational structure of the Norfolk Redevelopment and Housing Authority is a home service department. Here is the fountainhead for a very active set of garden clubs set up in the 14 housing projects that come under the supervision of the housing authority.

George Price, former assistant executive director, now in Charlottesville, says this of the work being done by the garden clubs through the home service:

"The garden clubs have contributed greatly to the over-all philosophy of the landscaping and beautification which we have undertaken.

"The clubs have grown in number and participation, and we wish there were more active participation such as we have now within these clubs."

At present there are nearly 600 women actively taking part in the clubs, which have the dual purpose of home-yard beautification and developing a sense of civic pride in the housing projects and community.

"The clubs not only help by what they do in the projects," Price

Two low-rent housing project tenants with something in common: an interest in gardens and gardening . . . and an interest in making the project in which they live a more attractive place. The ladies are examining part of an array of winter blooms.

All photographs on pages 14, 15, and 16 are by S. H. Ringo of the *Virginian Pilot* staff.

continues, "but the members set examples by what they do in their yards for the people next door— . even though the neighbor may not be a member of a club."

Home Service Department

The home service department, which "sponsors" the garden clubs, is what the housing authority calls a "plus program." This phrase is explained by Mrs. Frances Woolf, who heads the department: "We try to provide more than just a home for our tenants. We are trying to make these good neighborhood communities."

Mrs. Woolf's principal responsibilities, she explains, are making home calls and leaving helpful home-making ideas with the tenants: ideas for coping with such home headaches as how to cut down the light bills . . . or how to cook economically for large families.

But her main interests lie with garden club work. She is assisted in this phase of her job by Miss Eulalee Bobbitt, project services adviser. Their offices publish monthly garden club booklets for each individual project and organize beautification programs, clean-up campaigns, and other project improvement programs. They literally cover the city of Norfolk, for the projects are spread throughout the city.

Garden Clubs

Each housing project has its own club, with its own officers, and these individual clubs are free to join any local or national federation of garden clubs. Many have and others have plans to do so.

The idea for planned beautification of the housing projects through organized garden clubs originated in 1941 with Lawrence Cox, executive director of the authority, and Frederick Huette, superintendent of parks and forests for the city of Norfolk. Each project was given identifying shrubbery, bushes, or trees. One has camellias, one pyracantha, one azaleas, another rose bushes, one holly, and so on.

"Our projects will never go back to slums," says Cox. "We believe that if the tenants are allowed to plant flowers and shrubs, they will take more interest in their homes, yards, and communities."

When a tenant moves into one of the housing authority's projects, he is required to do only two things. One, pay the rent; two, keep the inside and outside of the rented property clean and neat.

Out of this requirement developed the idea for garden clubs.

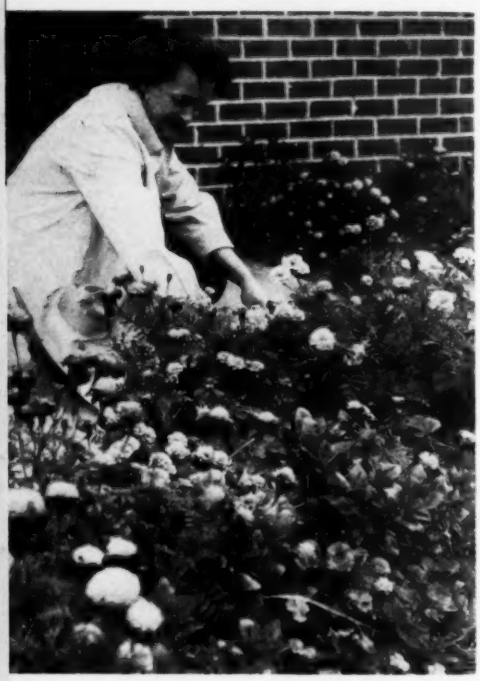

"This is the first time that I've ever had a chance to learn to beautify my yard." That, according to Author Adams, was the reaction of one public housing tenant to Norfolk's garden club plan . . . a plan that, linked as it is with the city's organized redevelopment and slum clearance program, is doing a part toward making of Norfolk a more attractive place in which to live.

This "organized" cleanliness started with the first project, Merrimack Park. The program has now blossomed into quite an undertaking.

Contests

Each year a clean-up contest is sponsored by the individual projects with prizes given for the best work or improvement. In May, tenants are given free soil and seeds. Over $500 worth of seeds and soil are distributed each year.

Then in July, the annual best flower bed, back and front yard contest is held. Prizes for this contest are home improvement items, such as trowels, flower-bed boxes, or other such items.

In September, project-wide flower arrangement shows are held and here, too, prizes are given.

Free bulbs are given to garden club members each November. For instance, nearly $100 worth of jonquil bulbs were distributed last November.

During the Christmas holidays, a doorway decoration contest is held in each of the projects.

In 1955, one club chartered a bus in order to take its members to tour the azalea gardens of Norfolk. The idea was so popular and met with such response that, from then on, each club has been taken on an annual tour of the gardens in April. The cost of the buses chartered for the tour also comes from the budget of the housing authority.

"The costs of these items are not much," says Price, "but they are little things which lend the most encouragement to the tenants who have a desire to beautify their yards."

Nursery

Planned beautification reached such proportions that in October 1954, a tract of land in the Merrimack Park project was converted to a nursery: owned and operated by the housing authority with the express purpose of providing nature's materials for landscaping work.

Under the supervision of George W. Ridgewell, the nursery operates on a nonprofit basis. Shrubs and other items raised at the nursery are sold at a fraction above cost to the projects. Any profit shown by the nursery is turned back into restocking the nearly six acres it now covers. Recently, a green house was added to the nursery.

Many cities have contracted the immense task of landscaping and maintenance to private concerns. But the landscaping or beautification of the housing projects in Norfolk has all been done by the housing authority. As in the case of owning their own nursery, they, in cooperation with Frederick Huette, have planned, planted, and maintained all of the landscaping.

"Our beautification program has worked," says Price, "because we work in close contact with the people who are most interested in it. In this case, it is the project garden clubs."

Tenants' Source of Success

A second reason for the huge success of the program is noted in this excerpt from a letter written by a tenant in a recent contest sponsored by the home service department:

"This is the first time that I've ever had a chance to learn to beautify my yard."

That is the story of the unique garden clubs in operation here in Norfolk. Pride begins in the home . . . and here is a case of where pride is making Norfolk a more beautiful place to live.

THE NAHRO PRESIDENT'S CORNER

JOHN SEARLES SAYS . . .

Today, at the beginning of 1959, we in most cities find ourselves with a chaotic conglomeration of city departments and separate authorities, each one borrowing money for different purposes and projects from different federal and state agencies; each one separately acquiring land; each one, by various methods, forcing families to move from one part of a city to another; no one of them paying much attention to aloof, understaffed, and underpowered planning commissions; all of them, in effect, working on the big job of city renewal and, in their totality, representing tremendous resources and powers—yet operating with very little cohesion and singleness of purpose.

What Would You Do?

Can you imagine what you would do if you were a municipal dictator and could reshuffle the local powers and the federal systems of grants-in-aid that are involved in the housing, local planning, urban renewal, and highway programs?

In 1951, a brilliant Assistant Engineer Commissioner of the District of Columbia, uninhibited by the knowledge of the historical accidents that have shaped the above and other programs, suggested a reorganization of the government of the city of Washington, including its housing, planning, and urban redevelopment functions, each of which was then, and is now, administered by separate local authorities. He presented a draft of his plan to the city fathers and to the boards of the independent agencies involved. Most readers were aghast . . . but a few of us were refreshed. The planning commission, the housing authority, and the redevelopment agency were all to be brought into the city family of departments, but in a form no longer recognizable as their old selves.

Because the housing authority, the redevelopment agency, and the planning commission in the city of Washington are actually not too different in organization and function from those in many other cities in the country, it may be interesting to describe (as well as I can remember them) the quickly suppressed proposals of this ingenious army officer.

Washington Plan

The redevelopment agency was, in effect, to become a redevelopment department. It was to have the job, however, of buying all land for all city functions, not only for slum clearance and redevelopment but also for low-rent public housing, schools, and expressways. It was also to have the job of redevelopment project planning and of disposing of land for private redevelopment.

The housing department that was to be created under the Assistant Engineer Commissioner's reorganization plan was to have two main sections, relocation and management. The relocation section was to function as a central relocation bureau for the entire city, handling the orderly movement of families from all sites purchased by the redevelopment department. The redevelopment department, as I have mentioned, would be the only land purchasing department in the city. The housing department would be responsible for the management of all low-rent properties and of all other acquired properties prior to disposition.

New low-rent housing was to be built by a department of construction, which also would build schools, police stations, and other municipal facilities. This department was to be staffed with architects and engineers and was to be generally in the construction business.

To the planning commission was to go the job of general city planning. Zoning and subdivision control (sometimes planning functions but, when administered in accordance with a good zoning plan, really licensing functions) were to be handled by a department of licenses and inspections, which would also handle the enforcement of the housing code. The planning commission would be a prime staff arm, advising the city fathers on the location and character of parks, expressways, urban redevelopment projects, and public housing projects but, more importantly, it would be out in the forefront of city development, deciding where we should be tomorrow and how we were going to get there. (The proposer of the reorganization felt that planning commissions are too frequently bogged down in the detail of today.)

The Assistant Engineer Commissioner who made this proposal did not fully count on the strong feelings that are generated by, and in, separate local authorities and on the great desire of such authorities to hang on to their independence, once they get it. Nor did he realize that frequently there is much strength behind these authorities and their distinguished local boards of directors and commissions. The report was quickly tabled and discarded.

Interestingly, however, some large cities are today appointing urban renewal coordinators—although historically coordinators are temporary officials, named to do a coordinating job while a reorganization is being thought about or is taking place. In some other cities, studies have resulted in recommendations for a centralization of the functions involved in the urban renewal process.

Could our suppressed Washington proposal have been a straw in the wind?

Federal Coordination

This kind of integrated planning-urban renewal-housing organization might function better and be easier to achieve if we had a greater flexibility in our federal grant programs. Is it possible that our urban highway, low-rent public housing, and urban renewal grants could be rolled into a single fund of money and a check made out to the city (which qualified because it had an integrated organization), to be spent for the purposes designated—for low-rent housing, urban redevelopment, and highways . . . in any way the city saw fit?

In order for such block grants to work, it would be necessary to determine the amount of federal

aid that any city would be entitled to receive. Thus, there would have to be either a federal approval of local budgets or some sort of a federal allocation formula. As between the two, I would prefer the former. Each year, cities choosing to adopt this kind of a federal "block" grant program could make up well justified budgets for urban highways, urban renewal, and low-rent public housing and submit these to Washington to form the basis of the single grant. An accounting would be made at the year's end.

What if all these proposals were adopted? We would have the city itself operating as a local public agency. It would have made, on the basis of reason and convenience, new assignments of the planning, housing, construction, road building, and urban redevelopment functions. Some would be reassignments of old functions but others would be assignments of new functions formerly performed by separate local authorities. Federal assistance for urban highways, housing, and urban redevelopment would come in the form of a block grant.

If a dream like this ever came true, we would have much less reason to blame the federal government for our mistakes. But, then, that might not really be an advantage after all.

John R. Searles, Jr., January 1959

NEWS NOTES—

(Continued from page 12)

the semi-annual meeting of the board of trustees of CED on problems of local growth and area development. A foreword written by CED Chairman Donald K. David, who is also chairman of the executive committee of the Ford Foundation, characterizes the papers as "direction signals as to the way we must go in clearing out the rot which infects many of our older communities and in intelligently approaching the growth problems which have already begun to bring frightening prospects to our sprouting urban and metropolitan areas." Mr. David also noted: "...to leave problems... [of economic development] to be solved by a Federal Redevelopment Administrator is an abdication of responsibility by free enterprise; an abdication that CED believes is wrong, unnecessary—and too expensive."

City News

GARY PUBLIC HOUSING PROJECT SALE PLAN HITS ANOTHER SNAG

What may yet become a first-of-its-kind sale of a public housing project to a private purchaser has run into still another in a long line of snags. The story follows.

The Gary, Indiana housing authority in July sold a more than 15-year old low-rent housing project to a local builder for $803,000. The Public Housing Administration has insisted that proceeds from the sale —the first such transaction to have been completed under Section 406 of the Housing Act of 1954—be used to pay off the bonded indebtedness on the project sold and, as far as the money will go, on two others that had been carried on the same contract.

The Gary sale has been in the mill for more than a year and there have been many varying reports as to reasons for the action. Despite the PHA stand on what happens with the sale money, *House & Home,* when the sale was first talked about, reported that the authority wanted to sell in order to get funds needed to fix up other projects; other sources said the authority wanted to use the money to build new housing; and still others intimated that the city council initiated the sale action in order to evade pressures that would force a change in the predominantly Polish character of the neighborhood in which the project is located.

Project sold is Duneland Village, a 165-unit project constructed under the United States Housing Act of 1937 at a cost of $750,000. PHA approved sale of the project back in 1957 (see August-September 1957 JOURNAL, page 275) and, in March 1958, first bids were taken. All initial bids fell short of an official appraisal of $900,000 and were rejected. PHA then agreed to a reappraisal taking into account the costs of converting the project for middle-income use and new bids were invited. The winner: Saul Cohen of Gary, who had entered the same $803,000 bid the first time the project was offered up.

But whether or not Mr. Cohen will get the project is still somewhat of a question, for the authority's year-long attempt to sell Duneland Village has run into another hitch: a taxpayer's suit testing the legality of the procedural steps taken in concluding the sale. Here's how things stood as of this writing: the trial court had sustained the authority in its actions but the complainant followed up by announcing his intention to appeal the decision. Word is that it will be some time before a final decision is reached in the higher courts.

SOME CRUCIAL QUESTIONS RAISED IN WASHINGTON, D.C. RENEWAL

Some crucial legal questions have come up in connection with city uplifting efforts in the National Capital—questions that have national implications as urban renewal drives move ahead across the nation. All center around a matter that has long concerned those who want to do right by the citizen: just how far is government entitled to interfere with private property rights in serving the public interest?

Questions raised on the Washington scene involve (1) rights of property owner vs. tenant; (2) definition of "public purpose"; (3) place of aesthetic values in exercising public powers.

1—Who has priority: owner or tenant?

Here's the problem that arose in October in connection with the district's Area C Title I project (Area C is the portion of the giant southwest Washington redevelopment area in which Webb & Knapp is chief rebuilding sponsor—see March 1958 JOURNAL, page 94): whether lessees or owners of condemned property have relocation priority under the district's redevelopment laws. Question arose because the local redevelopment agency had made commitments to relocate some of the same commercial enterprises in the area after redevelopment.

The problem was posed by the owner of what has been called a "million dollar parcel of property" —waterfront property that has been leased in part to Hogate's Restaurant—who in October filed suit. The

reason: she wants to re-acquire property in Area C after redevelopment . . . as do the restaurant operators, who, in fact, have formed a new corporation with the idea in mind of submitting a plan to the local redevelopment agency for a new, modern Area C restaurant.

The property owner—Olga F. Donnelly—sought to have land acquisition held up until after a final decision on the case could be reached but, on this count, she lost out: a three-judge panel of the court of appeals in December ruled that the planned condemnation of the waterfront property could go ahead. But the ultimate question of who will get priority for restaurant rebuilding remains to be answered.

2—What qualifies as a "public purpose" for land condemnation?

Washington, D. C. residents—at least those connected in any way with what is known as the West End Citizens Association—are up in arms about George Washington University's expansion plans. The university is seeking redevelopment agency help for what has been described as a "long-range plan to acquire an about 19-block area" for new university facilities and, as a matter of fact, the redevelopment agency staff has been authorized to survey a portion of the area on which the university has an eye to determine whether condition of existing housing merits the Title I treatment. How the "west-enders" feel about the whole thing: it's a "land grab that threatens basic American rights."

The long-smoldering antagonism toward the university's big plans erupted in December: *on December 3*, over the signature of the West End association, there appeared in local newspapers an "Open Letter to All Fellow Americans including the President of these United States and Members of Congress"; *on December 8*, the association staged a rally—almost 200 persons attended—during which, it was said, speakers "drew upon the Mayflower Compact, the Constitution, the words of George Washington, and the cold war" in outlining their opposition to the university. One speaker summed it up this way: "We protest against this proposed scheme to acquire property for an affluent organization at depressed, below-market

WHAT HAS AND WHAT HASN'T HAPPENED AT POLLS, AS TO HOUSING, REDEVELOPMENT

Carrying forward the action on housing and redevelopment referenda reported in the November 1958 JOURNAL (page 375) is the following roundup.

Two newcomers in Missouri: Two more Missouri communities have been lifted onto the city rebuilding bandwagon by their voters. In both Independence and Jefferson City, voters recently approved establishment of redevelopment agencies.

All-out for redevelopment in Philadelphia: Philadelphia voters overwhelmingly approved bond issues totalling almost 3.2 million dollars for redevelopment operations. Money is to go toward project operations in more than 15 renewal areas that are included in a six-year capital improvements program recently adopted by the city council.

Moving ahead in Hartford: Hartford voters also gave heavy support to their redevelopment program, by: (1) voting 20,057 to 5,404 for a 1.25 million dollar bond issue for what is known as the Windsor street redevelopment project; (2) voting 18,754 to 5,340 for a $550,000 issue that is to go toward extension of what is known as the Front-Market project; (3) voting 20,104 to 5,392 in favor of redeveloping a small area located opposite the Front-Market undertaking.

A stalemate in Dallas: Voters in Dallas still haven't had a chance to decide whether the community will participate in the Title I program; a referendum is a requirement of state enabling legislation. Big vote was to come off this fall but, because redevelopment was emerging as an issue in the November elections, the Citizens Committee for Urban Renewal urged the city council to postpone the voting until early 1959.

A "turn-down" in Oregon: Rejected by Oregon voters in the November election was a proposed state constitutional amendment to permit taxes levied against properties in a redevelopment area to be used, in part, to pay off indebtedness incurred in carrying out the project.

Disappointments in California: California redevelopment officials had their eyes on a state proposition affecting land acquisition practices for schools—the measure would have permitted immediate entry on condemned land for school construction. If it had worked, the same thing might have been tried in the redevelopment field, because delayed access has been credited with redevelopment troubles in San Francisco and elsewhere; however, the measure went down to thumping defeat. Also in California, but on a local level—a bond issue to help San Francisco finance a no-federal-aid redevelopment job that was to yield a new park and a museum of maritime history failed to rack up a required two-thirds approval.

prices from private owners, whose lifetime efforts and savings will be destroyed . . ."

3—How far can government go in attempts to preserve aesthetic values?

Tradition and progress have come to a clash in the historic Georgetown sector of the National Capital. On the one side, the "traditionalists" are fighting for tighter enforcement of the Old Georgetown Act—a measure approved by Congress in 1950 to preserve the "treasure house of Americana" in the neighborhood. On the other side, the "progressives" are fighting for the right to use their valuble Georgetown properties for more lucrative, or more functional, 1959-style facilities. At issue is the principle expressed in the famous 1954 United States Supreme Court redevelopment decision (*Berman* v. *Parker*—see December 1954 JOURNAL, page 437): that legislative bodies may "determine that the community should be beautiful as well as healthy."

Set up by Congress as a kind of recommendation board on matters pertaining to Georgetown's aesthetics was the Fine Arts Commission, which, in turn, got free advice from a three-man board of architects whose job it was to evaluate every application for razing, building, or remodeling in Georgetown. However, district commissioners retained final say-so on all recommendations of the Fine Arts group and—with modern, mercury-vapor street lights having replaced Georgetown's old-fashioned lamps and with, for example, a filling station having replaced what was once the authentic federal-era Union Tavern—feeling is that the commissioners have so far given the edge to progress. This, at least, was the reason cited when, in October, the three architects who had been advising the Fine Arts Commission resigned.

Later that same month, however, there came new hope that something might be done to save Georgetown for the "traditionalists." Stepping into the picture was the National Trust for Historic Preservation, which offered to help undertake a professional survey of Georgetown as a basis for setting up "criteria and regulations based upon court regulations in effective use" to insure that aesthetic values are preserved. To undertake the survey, NTHP hopes to get an $8000 appropriation from Congress—money that was authorized in the 1950 act but that never was made available.

Meanwhile—urban renewal in the National Capital is moving ahead. One symbol of the progress is the new housing on the rise in the Area B Title I operation (the Scheuer-Stevens tract—see May 1958 JOURNAL, page 168); another is the nearby Greenleaf Gardens development—a new 456-unit, 7.7 million dollar low-rent public housing project; and, in other portions of the southwest redevelopment section, land acquisition is moving ahead (as of October, more than 70 per cent of the total area of Area C had been acquired and some 1740 families had been relocated).

In the northwest section of the city, big things are happening, too. With applications already made for federal loans for rebuilding one neighborhood, district commissioners in December gave the go-ahead for detailed planning in a second. The northwest sector, for purposes of urban renewal planning, has been divided into 12 neighborhoods.

SOME NAHRO-TYPE IDEAS CROP UP IN COLUMNS OF SATURDAY EVENING POST

Support for the kind of public housing reforms long advocated by NAHRO has come from the editorial columns of the *Saturday Evening Post*.

"Public Housing Need Not be an Ill-Kept Slum" was the title of an editorial that appeared in the November 22 issue of the nationally-circulated magazine. The editorial tells of the deterioration that has taken place in some low-rent projects and then goes on to describe in laudatory tones moves afoot to change the picture, many of which are in line with program proposals to which NAHROites reaffirmed their approval at the 1958 Annual Conference (see December 1958 JOURNAL, page 388).

The "chief cause of this disaster [slum conditions in low-rent housing]," says the *Post* editorial, "is the principle on which low-rent public housing is based. It is segregation by income. 'Only the poor can live here'—that is the rule. . . . To make matters worse," the article continues, "as soon as a tenant does well at his job and gets a substantial raise, his income exceeds the fixed limit and he is forced to move out. Thus only the poor remain permanently. And even if 95 per cent of them are good people, they usually lack the ability to provide leadership and keep the troublesome 5 per cent in line . . ." Thus, said the *Post*, the "root" of public housing's present problems "is in well-meant rules that establish a permanent island of the poor . . ."

Listed in the article as good ideas for helping to solve the problem were such things as: amending laws so that families shall not be forced to move when their incomes rise; permitting the sale of low-rent units to over-income tenants as cooperatives; improved tenant selection practices; enlisting the services of trained social workers as part of a project staff.

RENEWAL FUNCTION TRANSFERRED TO NEW AGENCY IN MILWAUKEE

In line with amendments made in Wisconsin enabling legislation in June (see August-September 1958 JOURNAL, page 284), renewal functions formerly handled by the Milwaukee housing authority have been turned over to a separate new agency—the Milwaukee Urban Redevelopment Authority . . . but not without some trials and tribulations. Executive director of the new agency is Willard E. Downing, who is on a leave of absence from his position as a professor of social work at the University of Wisconsin to take on the $12,500-a-year Milwaukee job.

Difficulties with making the big change in Milwaukee centered around: (1) personnel; (2) positions; (3) preparedness.

Personnel problems: One of the disputes that arose was in regard to the naming of an executive director for the new agency. The board of commissioners appointed for the agency had at least two

choices: (1) they could have named a separate director for the new agency, as they did; (2) they could have permitted their agency to operate under a common director—and staff—with the housing authority.

Public sympathy appeared to be with the latter alternative. For example: a group of local officials and citizens who made a special point of studying how urban renewal works in other communities recommended the housing authority-renewal agency combination. In addition, a number of people in the city argued that Richard Perrin, who, as director of the local housing authority, had headed up the city's urban renewal program since its inception several years ago, had experience on his side and should have been offered the job.

But the urban renewal commission vetoed such ideas when they voted in early September in favor of Mr. Downing's appointment. Said the *Milwaukee Journal* of the affair: "The first and major error the authority made was in rejecting the most experienced and able source of help it has—the housing authority and its director, Richard W. E. Perrin. This brought sharp criticism from the aldermen who know most about urban renewal and who have been fighting for it for a long time . . ."

A controversial position: Another howl was set off when the new urban renewal commissioners decided to provide their agency's director with a deputy, at a salary of $11,500 per year. The *Milwaukee Journal*'s stand on the matter: "Why a deputy at that pay range? Or, why a deputy? The time may come, if urban renewal really gets moving, when a deputy will be needed. One certainly is not needed now . . . [Mr. Perrin] has no deputy and never has had. Why will it take two top salaried men to take over a job that took only part of Perrin's time?"

Upshot was that the commissioners gave in to public opinion and dropped the deputy director idea.

Preparing to take over: The question of just how the new and inexperienced urban renewal agency should take over the renewal work that had been handled by the housing authority created more problems. Developments went something like this: (1) soon after the renewal agency commission was set up, it was notified that the housing authority wished to relinquish control over renewal operations by October 1; (2) the renewal commissioners asked that the housing authority agree to keep control for a six-month period, to permit the new agency to get solidly on its feet and oriented to the job ahead; (3) housing authority and other officials met with regional Urban Renewal Administration officials to discuss a six-month transitional period as had been proposed and were warned that, if such a plan were undertaken, the federal government would demand a firm contract between the agencies . . . a time-consuming operation that would be certain to delay Milwaukee's renewal program; (4) in late September, the urban renewal agency moved to take over the renewal operation and some 12 housing authority employees who had been working on the program.

Other housing developments in Milwaukee: Soon after it was stripped of its renewal powers, the local housing authority began rolling on the local low-rent housing program. Announcement came September 28 that the city was planning two new projects for a total of 800 units.

Meanwhile, on another front, Milwaukee's renewal program got something of a boost when it was announced on October 4 that a labor union was going to sponsor Federal Housing Administration-insured (Section 221) middle-income housing for relocation of redevelopment displacees. The union —the American Federation of State, County, and Municipal Employees (AFL-CIO)—plans to build a development of 64 structures containing some 220 one-, two-, and three-bedroom units that will rent from about $77 to $94.

In Cincinnati—*first family to move into the Cincinnati Metropolitan Housing Authority's new 3.6 million dollar Findlater Gardens low-rent project is being greeted in the picture, above, by Helen Findlater, widow of Ramsey Findlater, for whom the project was named. Mr. Findlater—he died in 1955 (see August-September 1955* JOURNAL, *page 256)—was director of CMHA from 1946 until his death; was NAHRO vice-president in the year 1952-53; and was an acknowledged leader in the housing field.*

Findlater Gardens, with 376 units, represents the smallest of Cincinnati's six public housing projects. The project, which is to be made up of 87 buildings, went under construction on a 47-acre site in July 1957; first families began to move in as of November 1958, when some 40 units were completed. Rents range from $19 for a one-room unit to around $65 for a four-bedroom unit.

SAN LEANDRO COUNCIL SCRAPS LOCAL REDEVELOPMENT PROGRAM

The San Leandro, California city council has voted, 5-to-2, to junk the local redevelopment program. The action, it was reported, came

about as a result of agitation by citizens living in an area that had been slated for renewal.

The San Leandro Redevelopment Agency, now out of business, had completed a General Neighborhood Renewal Plan and had received Urban Renewal Administration approval of a capital grant reservation of 1.7 million dollars for a first project for the community when it got word from the council that the city would no longer support a program of federally-aided redevelopment. King Forrest Cole, who headed up the redevelopment agency before it closed shop, has agreed to stay on as director of a new city department charged with the investigation of alternate programs for rejuvenation of San Leandro's central business district—programs that would not require Title I help.

COLUMBIA CITY COUNCIL OKEYS "TIME PAYMENT" RENEWAL PLAN

The Columbia, Missouri city council on December 1 voted 4-to-0 to initiate a "pay-as-you-go" plan to finance a 126-acre urban renewal project in what is known as the Douglass School area. The action followed defeat in October of a bond issue that was to provide the local share of the federally-aided project by boosting property taxes (see November 1958 JOURNAL, page 374).

The October elections were taken by Columbia's city fathers as a sign that residents in the city liked redevelopment—more than 60 per cent of the voters voted "yes" on the bond issue, though it failed to rack up a required two-thirds majority. Further, as was reported in the November 1958 JOURNAL, sections of the city where the issue made a less good showing on the ballot were those traditionally opposed to property taxes. As the *Columbia Missourian* put it: "The election made it impossible to issue general obligation bonds at this time but it did show that most Columbians favor the idea [of city rebuilding]. If this is a clear indication of the will of the people—and usually we believe that the majority should rule—then the next logical step [is] to find another way of financing the program. . . ." And that's exactly what the city council set out to do.

Because of federal rationing of renewal funds and the threat of the city's losing its place in line for the money, the city council acted quickly:

—*on November 3*—just days after the election—a resolution was approved calling for the city manager to hunt out new ways to finance redevelopment;

—*on November 17*, the ordinance setting up the "pay as you go" plan was introduced;

—*on December 1*, after a public hearing (strongest opposition registered at the hearing was that of a lawyer representing two property owners with big holdings in the redevelopment area), the council voted unanimously in favor of the plan (one councilman did not vote because he has property in the redevelopment area).

The ordinance calls for a breakdown of the project into a three-stage, five-year plan, with local contributions—both cash and noncash—to be provided on a stage-by-stage basis. The money is to come from general funds from as yet undisclosed income sources (a study is under way to determine precisely what kind of taxes will be used). Suggested as a possibility: cigarette and gas taxes.

With the city council having acted, the local redevelopment agency hopes to begin land acquisition operations for the first stage of the project in February. In the meantime, a second appraisal of properties in the area must be made and federal approval of plans is being sought. Some $800,000 in federal money was originally reserved for the Columbia project but because of expansion of the project and rising costs, the city is now seeking around 1.7 million dollars for the first phase.

NEW AGENCY COMBINING HOUSING, RENEWAL SET UP IN PUERTO RICO

A new agency, combining the housing and renewal jobs, has been set up in Puerto Rico. Known officially as the Puerto Rico Urban Renewal & Housing Corporation, the agency took over all powers and functions of the old Puerto Rico Housing Authority on October 13.

Cesar Cordero Davila, who headed up the housing authority as executive director and secretary, is now in charge of operations of the new agency, with the title of executive director. The address of the successor agency remains the same as that of the housing authority: P.O. Box 397, Rio Piedras, Puerto Rico.

PITTSBURGH CORPORATION PLANS TO BUILD INTERRACIAL HOUSING

Calumet Development Corporation—an organization inspired in good measure by the Pittsburgh Presbytery and formed by some 20 citizens of the city—has gone in business to sponsor middle-income housing to be sold on an interracial basis. The corporation, which already has two model homes up, is getting city help in the form of advances—to be repaid from assessments on property owners—for street utility installation costs.

What's envisioned by the developers as a "first project" is a section of 36 homes—they will range in price from $16,000 to $19,000—in what is known as the Eastwood-Blackridge area of the city, a neighborhood that has been described as a "good, moderately-priced residential area" [price range: $16,000 to $25,000] and one that is "presently all white." (There is some Negro occupancy within a mile of the neighborhood.) Five basic building types will be used by the developers, who have hired as contractor Catranel, Incorporated, a firm headed by Roland S. Catarinella, a president of the Pittsburgh home builders association and vice-president of the Pennsylvania home builders group.

City participation in the plan, according to Seymour Baskin, a lawyer handling legal details for the developers, is "not a usual arrangement in private developments [but] is permitted by law and used where the developer is not the owner of all abutting property." (Calumet Development Corporation owns all property abutting one street involved in the development but only one-half the property abutting the other.) If this were not the case, Mr. Baskin says, "some owners would receive improvement benefits without cost since assessments can be levied only by governmental agencies." Said he: "The city's cooperation was graciously given in view of [the assessment situation]; because of the purpose of the development; and in expectation that payment of assessments against the corporation would come soon after completion of work."

Calumet Development Corporation has been in the making for almost two years. Procedural difficulties, according to Mr. Baskin, have been responsible for the hold-up in the group's first try at middle-income open-occupancy housing

Once-controversial Currie's Woods project is now under occupancy (see story)

but, he says, "good progress is now anticipated. Excellent commitments were received from the Federal Housing Administration, good financing is available, and sales prices are competitive for [the city]."

The board of directors of Calumet Development Corporation today consists of six white persons and three Negroes. Included are a builder, two mortgage bankers, an attorney, a newspaper editor, the secretary of the Pittsburgh Presbytery, and other business and civic leaders.

CONTROVERSIAL CURRIE'S WOODS IN OCCUPANCY IN JERSEY CITY

A low-rent public housing project that once figured in a political controversy and that was once subjected unnecessarily to referendum test is nearing completion in Jersey City. First families began moving into the project—the 10 million dollar Currie's Woods Gardens development— in November.

The 712-unit project was already under construction, when, in 1957, a new city administration made moves to junk it. The reason the administration gave for its position: the city already had more public housing than the budget could stand. Voters had different ideas, however, and, when the matter was put to ballot test, here's the way it came out: 25,550 *for* the project; 22,750 *against*. In the ward where the project was under construction, vote was 7024 *for* public housing; 1984 *against*.

When completed, the Currie's Woods project will represent the largest of Jersey City's eight low-rent housing projects. Made up of eight buildings (one is a structure housing a community hall—300-person seating capacity—management offices, and public rooms), the project is being constructed on a 13.5-acre site, with building coverage at 20 per cent. Landscaping, recreational areas—including six basketball and softball courts—and a parking area on the perimeter of the project (big enough for 300 cars) will occupy the balance of the site.

Designed by the architectural firm of Kelly & Gruzen, the project will house 712 families in five 13-story buildings and two 12-story buildings. Included are 113 one-bedroom units; 356 two-bedroom units; 178 three-bedroom units; and 65 four-bedroom units.

Construction started on the project in May 1957; a model unit was first opened for public inspection in October 1958 (thousands of people showed up to look it over); and completion of the final project building is slated for this coming April. General contractor for the project is Terminal Construction Corporation of Woodridge, New Jersey.

CHICAGO CITY COUNCIL APPROVES HYDE PARK-KENWOOD PROJECT

With some "ifs, ands, and buts," the Chicago city council in November approved the 38 million dollar, 900-acre Hyde Park-Kenwood conservation plan—the first big-scale undertaking of the city's Community Conservation Board and a plan that, from the beginning, has had strong support from a host of powerful persuaders. The conservation plan—it ties in with a redevelopment operation in Hyde Park (see May 1957 JOURNAL, page 167), where Webb & Knapp has already broken ground for rebuilding—is at present awaiting Urban Renewal Administration approval of loan and grant contracts.

Chief among the backers of the Hyde Park-Kenwood improvement plan has been the University of Chicago, whose campus is in the midst of the deteriorating, but once blue chip, neighborhood near the city's celebrated lake front and just a short hop to the loop. Since 1952, the university has been a guiding force—contributing talent, time, and money—first, toward citizen and, later, toward official moves to

uplift the area; in 1953 the university was aided in its efforts by a $100,000 grant from the Field Foundation, which was used to help plan the program through the university-sponsored South East Chicago Commission (see December 1953 JOURNAL, page 420). Citizen participation has been kept at a high peak by the Hyde Park-Kenwood Community Conference—now some 4000 members strong—which invited residents to hammer out details of plans at some 1000 block meetings, 150 committee meetings, and, it has been said, hundreds of other sessions.

Despite the strength of the support, the Hyde Park-Kenwood plan has had its problems . . . problems that, in the first place, led to a cutback in early plans of some 2.1 million dollars in local and federal money (reductions were made possible by a decision to save some buildings originally slated for demolition; to eliminate one of the street-widening plans, etc.). Problems also came up at the last minute—at hearings held before final city council action—and resulted in the qualifications put upon approval of the plan by the council.

Backers of the conservation program, including spokesmen for Protestant and Jewish church groups, were out in full force for the hearings, held in September. But there were also some opponents. Chief spokesman at the sessions against the plan turned out to be The Very Reverend Monsignor John J. Egan, executive director of the Cardinal's Conservation Committee of the Roman Catholic Archdiocese. Monsignor Egan's strongest complaint: not enough thought to housing needs of low-income families who will be displaced by what clearance is proposed. Said he: some 200 to 400 units of low-rent public housing are needed in the area. He also asked that safeguards for "humane" relocation practices be made part of the plan and that there be assurances that relocation housing for displacees would be available throughout the city before any clearance is undertaken.

When the city council got the plan for approval, it took into consideration Monsignor Egan's sharply-worded criticisms. But the council had only two alternatives: (1) it could reject the plan outright, which would mean a long delay, since it would have to be rechanneled to all the neighborhood and planning groups or (2) it could accept the plan without the changes that had been requested. In the interest of getting the plan on the road, the council gave it the okey but then tacked on some recommendations more or less in line with what had come out of the hearings: (1) that 120 units of public housing be provided in the Hyde Park-Kenwood area (half for the elderly) in addition to the 84 units already included in the plan; (2) that the program be handled so that vacant land is not left idle for too long a time; (3) that steps be taken to insure that relocation does not produce too much of a hardship on those displaced.

Meanwhile, with plans off to the federal agency for approval, a new battle, centering around the council's public housing recommendation, is taking shape: there are those who want the public housing concentrated on one site and then there are those who would like to see it scattered throughout the area.

PHILADELPHIA CONTINUES TO MAKE HISTORY IN REDEVELOPMENT FIELD

With some notable "firsts" in redevelopment already to its credit (see March 1958 JOURNAL, page 96) and with some 15 projects on the books, Philadelphia keeps popping up with the kind of ideas—like the design competition described on page 13—and the kind of results that have made the city a pacesetter in the urban renewal field. Some more of Philadelphia's claims to fame are described below.

A "land bank." It's land in the bank that figures in one of the ways that Philadelphia is making urban renewal news these days.

In midsummer, the city and the local chamber of commerce joined forces to set up the Philadelphia Industrial Development Corporation—a corporation made up of city officials and chamber representatives, which is to accumulate land for industry somewhat along the lines of ideas advanced for general redevelopment by William Slayton, former NAHRO assistant director, in the October 1957 JOURNAL (see page 325). The commerce group and the city—which is using proceeds from the sale of publicly-owned land for initial capital for the "land bank" program—each agreed to contribute $75,000 toward getting the corporation on its feet.

The space for industrial parks that will be made available by the "land bank" is expected to create a business climate that will lure new industry to the city and that will keep the eyes of existing industry averted from the suburbs. Less than 3000 acres of vacant land suitable for industrial use is now available in Philadelphia and belief is that, in order to provide for future expansion, at least 3500 acres more will have to be made available by 1975. Most of this additional acreage is expected to be accumulated via redevelopment agency clearance of blighted areas. Though a plan to clear a 100-acre tract with federal aid, for the present, has been held up because of failure of the 1958 housing bill, the redevelopment agency already has sold a 113-acre vacant site (it was city owned) to a Boston corporation and is now negotiating with a drug company for sale of another 50-acre site that is part of a city-owned tract.

The big show. Philadelphia's urban renewal plans for what is known as the Eastwick neighborhood are getting billing as the biggest city rebuilding show in the nation. And, while some opposition has been organized to stage a last-ditch battle against the project, feeling is the show will be on the road before long. The Eastwick plan—it calls for the uplifting of some 2506 acres—got a go-ahead from local courts just last month, when it was decided that the city could sell bonds in the amount of 60 million dollars to finance project operations.

Present problems come as a result, largely, of the unusual mixture that goes to make up Eastwick: it combines virtually everything from "squattertowns"—and the "squatters" like Eastwick the way it is—to relatively fancy middle-income homes—some still mortgaged, whose property owners are afraid of losing all. Philadelphia has come up with some novel ideas for easing the problems of owners of good property but report is that to date such plans have met with skepticism.

Of the 2500-acre project site, only some 800 acres are in existing land—the rest is marshland that is being reclaimed by piping in culm from the Schuylkill River. Nevertheless, some 6000 properties

including around 2500 dwelling units, are affected by the plan. After clearance and improvement of the project area, Eastwick is to be redeveloped as a kind of city within a city, with some 11,000 new dwelling units, supporting commercial and public installations, and industry. The project is expected to take ten years to complete, while hopes are to have the first 1000 units of new housing up by early 1961.

Approved last July for a federal capital grant reservation of $22,392,000 and a loan of $54,654,600, the Eastwick undertaking is expected to cost the city around 35 million dollars. Noncash local contributions toward project costs will come in the form of new schools, parks, playgrounds, streets, etc.

A clean sweep. The way in which Philadelphia is proceeding with its many-faceted renewal plans—a way that promises eventually to sweep through the entire city—continues to get attention. As mentioned earlier, the city now has more than 15 projects on the books, some federally-aided, some combining state and federal aid, and one or two nonassisted. The aim, as was pointed out by Philadelphia Development Coordinator William Rafsky at NAHRO's recent annual conference, is to work from the outer fringes of the city, using a combined rehabilitation-clearance approach, and eventually to get down to center city. In these ambitions the city has to date racked up impressive support from its voters (see box, page 19). Some recent developments in a few sample projects are presented below.

1—East Poplar: Scheduled for next month is a public hearing on what is known as the East Poplar urban renewal project (it is near another project site, East Poplar A, which yielded Penn Towne—see March 1956 JOURNAL, page 100), with the plan expected to go to the city council for approval in April or May. The 87-acre project area, most of which will be cleared, is to provide "a modern cosmopolitan bazaar" (some merchants now located in the area will rehabilitate their present quarters) and private low-cost sales housing.

2—Mill Creek: In late 1958, the redevelopment agency condemned in separate parcels two small areas in west Philadelphia, known as the Mill Creek projects, numbers 1 and 2, respectively. The federally-aided projects are to yield a new school and low-rent public housing.

3—Food Center: Under construction on 375 acres of land in what is known as the Pattison Avenue East redevelopment area is a new food distribution center. Land was acquired by the city, with no federal or state aid involved, for 1.7 million dollars. Scheduled for start of occupancy this summer, the 100 million dollar center, it is said, "will give Philadelphia one of the nation's largest and best integrated food markets."

In disaster-stricken Murphysboro, Illinois, cooperation at all levels of government resulted in the construction of low-rent public housing units, like those pictured above, in record time (see story, this page).

CHRISTMAS GIFT FOR MURPHYSBORO DISPLACEES: A LOW-RENT PROJECT

A week before Christmas, in 1957, a tornado swept through Murphysboro, Illinois (population: around 10,000), leaving death, destruction, and desolation in its wake (see March 1958 JOURNAL, page 86).

A week before Christmas 1958, a good many of the people who had been uprooted from homes by the 1957 disaster already were living in new housing on the same site from which they had been displaced. Responsible for the Christmas package to Murphysboro residents: the Public Housing Administration, the Jackson County Housing Authority, the Illinois State Housing Board, Southern Illinois University, local officials—all of whom cooperated to get new low-rent housing up in the community in record time (see July 1958 JOURNAL, page 239).

Ordinarily, according to PHA, 24 to 30 months are required from initiation of a program to occupancy. In Murphysboro, despite the fact that the hoped-for goal of having units completed by October failed to materialize, families were moving into units less than a year after the disaster had struck; only 10 months after PHA approved the local authority's request for aid; and only six months after the contractor was given orders to proceed with construction.

While first families have already moved into the new Murphysboro project—by New Year's day, a dozen families were accommodated—final work was expected to be completed this month. The project—constructed on a site that was hardest hit by the 1957 disaster—represents the first 40 units of a local program that is to include 90 units (the additional 50 are to be erected on vacant land in another part of the community).

The new Murphysboro project is made up of 28 factory-built structures, representing the first use of a combination of duplexes and single-family prefabricated homes in a public housing development in Illinois.

PRIME AND PERTINENT

Prepared by Marion Massen

A PRACTICAL GUIDEBOOK BECAUSE it shows flesh-and-blood cases where the principles have worked—that's the way one purchaser of *Working Together for Urban Renewal* describes it. "Working Together"—in case you overlooked its announcement a couple of JOURNALS back—is the NAHRO publication that tells how social welfare and housing and urban renewal agencies can join forces for mutual benefit on such matters as relocation of displaced families; housing code enforcement; neighborhood improvement; care of troubled families. We're drawing attention to the book again because we feel that NAHRO members and JOURNAL readers will not want to miss this chance to get the record of case histories of successful collaboration, which may easily suggest the solution to specific problems cropping up right now in their own localities. We also want to mention, with satisfaction, that the book has gone into its second printing. Order a copy at $1; discounts for quantity orders.

NOTE FOR NEW OR LONG-TIME JOURNAL READERS: to make certain you are not missing any NAHRO publications you might want, note below, also, that the *1959 NAHRO Publications List* is off the press. A postcard request will bring you a copy.

NEW FROM NAHRO

PUBLIC RELATIONS TIP No. 67: MEETING CRITICISM: COUNTER-ATTACK TECHNIQUES. November 1958. 1 p., multilithed. Distributed as a membership service to agency members of NAHRO and to full-rate RIS subscribers. Additional copies free on request to agency member personnel. National Association of Housing and Redevelopment Officials, 1313 East 60th Street, Chicago 37, Illinois.

Ways of answering unwarranted (and warranted) criticism and how to judge what to do, when.

A NEW LOOK AT PUBLIC HOUSING, Report by Social Education and Action Committee, National Federation of Settlements and Neighborhood Centers. 1958. 16 pp. Distributed free to agency members of NAHRO. Available free from National Federation of Settlements and Neighborhood Centers, 226 West 47th Street, New York 36, New York.

An evaluation of public housing as of 1958, from the point of view of social workers engaged in settlement work, with comments on the urban renewal tie-in.

NAHRO PUBLICATIONS 1959. National Association of Housing and Redevelopment Officials, 1313 East 60th Street, Chicago 37, Illinois.

New and old: more than 60 NAHRO publications currently in stock are listed and described; also listed, some 20 items in a public relations kit available on request for communities with new or threatened programs.

NEW FOR RIS SUBSCRIBERS

Special mailings to full-rate subscribers to NAHRO's Renewal Information Service during the past two months. Copies may be available to others directly from originating source.

URBAN RENEWAL—MARINA VISTA: How It Affects You. Undated. 24 pp. Redevelopment Agency of the City of Vallejo, P.O. Box 1432, Vallejo, California.

"Popular" booklet for public distribution.

FLUID SUBURBIA, by William Zeckendorf. Reprinted from *The Yale Review*, Autumn, 1958. 14 pp. *The Yale Review*, Yale University Press, New Haven, Connecticut.

Thoughts on the regeneration of cities by one of the big urban redevelopers.

BAYSIDE PARK URBAN RENEWAL PROJECT, prepared by Bayside Improvement Association and Citizens' Committee on Housing and Urban Renewal for City of Portland, Maine. Undated. 12 pp. Portland Slum Clearance and Redevelopment Authority, City Hall, Portland, Maine.

This month's candidate for "OUTSTANDING IN PRINT" notice, because it takes advantage of design, and color, and simple language to show Portland citizens the benefits of its intown residential renewal project.

1958 ANNUAL REPORT OF THE DISTRICT OF COLUMBIA REDEVELOPMENT LAND AGENCY. 30 pp. District of Columbia Redevelopment Land Agency, 685 Main Avenue, S.W., Washington 24, D.C.

Offers chance to "look in on" an extensive slum clearance agency program with a 12-year history.

PAST IMPERFECT TO FUTURE PERFECT . . . THROUGH PRESENT PLANNING AND ACTION: 1958 Annual Report of the South Norfolk (Virginia) Redevelopment and Housing Authority. 12 pp. Apply to the Authority, 10 Admiral's Road, South Norfolk, Virginia.

Enough illustrations—including a most legible map—and lively text woven around a little grammar-play on tenses combine to tell the year's story of a small authority.

RECREATION AND PLAYGROUND DESIGNS, by Saul Bass. Reprint from *Arts and Architecture*. 2 pp. *Arts and Architecture*, San Francisco, California.

RELOCATION: The Human Side of Urban Renewal. November 1958 *Issues*. 6 pp. The Philadelphia Housing Association, 1717 Sansom Street, Philadelphia 3, Pennsylvania.

A summary of the citizen group's long report entitled *Relocation*.

ARTICLES ON URBAN RENEWAL IN BALTIMORE CITY. Reprint from *Catholic Review* for August and September 1958. Citizens Planning and Housing Association of Baltimore, 319 North Charles Street, Baltimore 1, Maryland.

Six articles on aspects of urban renewal in Baltimore that suggest subjects church papers in other cities may well be interested in preparing and publishing.

URBAN RENEWAL

THE POTENTIAL OF NEIGHBORHOOD CONSERVATION IN PITTSBURGH'S URBAN RENEWAL PROGRAM. A Report by The Build America Better Committee, National Association of Real Estate Boards. 1958. 13 pp., mimeographed. Limited supply. Request from ACTION-Housing, Inc., Number One Gateway Center, Pittsburgh 22, Pennsylvania.

Recommendations resulting from a "survey visit" to Pittsburgh by a team of the Build America Better Committee: step-up of relocation through intensified use of Section 221 certifications; strengthening of housing code and enforcement; execution of conservation programs for various areas, with remedies for present faults specified (see June 1958 JOURNAL, page 215).

URBAN RENEWAL: A PLAN FOR THE LIVESTOCK SHOW AREA IN LITTLE ROCK. 1958. 36 pp., plus exhibits. $3. Housing Authority of the City of Little Rock, 121 Second Street, Little Rock, Arkansas.

Presentation of a rehabilitation-redevelopment plan to accomplish renewal of a deteriorated residential area in Little Rock around the Arkansas Livestock Show Grounds, worth comment for two reasons. As an official document, containing the technical information necessary for submittal of application for federal aid, it is attractively done up by offset—with explanatory maps, a sketch or two, and a dash of color—so that it can without doubt also help along the selling job on disposition of the cleared part of the site for private redevelopment. Moreover, it includes two documents—a bill of assurance, to be signed by property owners rehabilitating or building anew that binds them to achieve and maintain certain desired housing standards (a city-wide housing code for Little Rock has yet to be adopted) and a preweighted judging system for each structure designed to determine the economic feasibility of rehabilitation. Activity has been under way in the Livestock area for about ten months and report is that the bill of assurance is gaining acceptance without difficulty—in fact, is appreciated by many of the property owners as the safeguard it is intended to be to the future of the neighborhood.

NEIGHBORHOOD ANALYSIS. 1958. Un-

paged, (approximately 50 pp. mimeographed charts). 50 cents. Portland City Planning Board, City Hall, Portland, Maine.

A very good (and well-communicated) neighborhood analysis for Portland, made as part of the city's workable program requirement for federal aid. Begins by identifying the neighborhoods of the city; shows how they were rated by structure and environment in the survey (and the results); proceeds to analyzing the cost of the blighted neighborhoods; ends with recommendations for renewal treatment. A potentially helpful guide to other localities engaged in neighborhood analysis, especially because its approach has considerable citizen-education value.

STATE ENABLING LEGISLATION, URBAN REDEVELOPMENT AND URBAN RENEWAL: List of Citations to Statutes, Constitutional Provisions, and Court Decisions. 1958. 21 pp. and summary. Obtainable from Housing and Home Finance Agency, Office of the General Counsel, Washington 25, D. C.

Cumulative round-up carrying through June 1958.

REUSE AND VALUE APPRAISALS IN URBAN RENEWAL. Bulletin AB 8-58. Urban Renewal Administration, Housing and Home Finance Agency, Washington 25, D. C. 1958. 9 pp. Obtainable on request.

Another of the URA's helpful advisory bulletins, this one describing techniques for improving the quality of reuse appraisals. Supplements bulletin AB 6 on the subject of valuation problems involving reuse of urban land. Article is reprint from *Urban Land*, July-August 1958.

THE FUTURE OF BUFFALO. Undated. 12 pp. Buffalo Redevelopment Foundation, Rand Building, Buffalo 3, New York.

Capsule summary of recommendations in ten-year redevelopment plan recently made for city by Keith and Feiss (see December JOURNAL, page 398).

THE "LITTLE" ECONOMIES: Problems of U.S. Area Development. Papers Delivered at the Semi-Annual Meeting of the Board of Trustees, Committee for Economic Development, New York City, May 29, 1958. 1958. 60 pp. 50 cents. Committee for Economic Development, 711 Fifth Avenue, New York 22, New York.

Intended to alert businessmen and industrialists to urban renewal and other current "area" problems and the need for private enterprise to participate in the development of state and local economic policy (see page 12).

MAINTENANCE

GROUNDS MAINTENANCE HANDBOOK, by H. S. Conover. Second Edition. 1958. 501 pp., illustrated. $10.75. F. W. Dodge Corporation, New York, New York.

The maintenance man in charge of grounds for any local authority should find answers here to any and all problems—from growing and keeping up grass, selecting and planting trees and shrubs, to insect and weed control. There are chapters, too, on planning and scheduling, public relations, and materials specifications. The author, a landscape architect for nearly 30 years, participated in development of recreational facilities for the Tennessee Valley Authority, where the first edition of the handbook was used as an operating manual.

Court Decisions

Prepared by

MORRIS MILLER

Member of the law firm of Scott W. Lucas, Washington, D. C.

SUPREME COURT DECLINES REVIEW OF HOUSING SEGREGATION CASE

On January 12, 1959 the United States Supreme Court issued an order declining to review the case of *Queen Cohen* v. *Public Housing Administration* (see August-September JOURNAL, page 281). The court of appeals (fifth circuit) had held that Queen Cohen's failure to prove that she had ever applied for admission to a Savannah, Georgia public housing project, or had been denied admission to the project because of her race or color, precluded her maintenance of a suit in the federal district court to enjoin PHA's alleged enforcement of racial segregation in public housing in Savannah.

VACANT LAND REDEVELOPMENT FOR INDUSTRY UPHELD FOR ILLINOIS

On May 21, 1958 (rehearing denied June 18, 1958) the supreme court of Illinois, in a split decision, sustained the constitutionality of the 1955 amendments to the Illinois Blighted Areas Redevelopment Act of 1947 (*People ex rel. Adamowski* v. *Chicago Land Clearance Commission*).

These amendments authorized the taking of blighted vacant land for industrial or for other than residential uses. The court disposed of the first contention of the appellants, which was that the amendments were unconstitutional because they provide that after the acquisition of vacant areas, it may be developed for other than residential uses, by pointing out that the acquisition of a slum and blighted area and the removal of slum conditions are in and of themselves public purposes, regardless of the use thereafter made of the property. The second contention of the appellants was that the amendments were unconstitutional in that they constitute an unlawful delegation of legislative power. The majority held that there was no such delegation, because, although the legislature cannot delegate its power to make a law, "it can make a law delegating a power to determine some facts or state of things upon which the law makes, or intends to make, its own action depend."

This decision follows and extends the previous decision of the same court in *People ex rel. Gutknecht* v. *City of Chicago*. In this earlier case, the court upheld the validity of an earlier amendment to the Illinois Blighted Areas Redevelopment Act of 1947 providing for the acquisition of vacant land for residential reuse.

TRANSIENTS BANNED FROM FHA APARTMENTS BY TOP U.S. COURT

On November 24, 1958, the United States Supreme Court, dividing five to four, held that the National Housing Act prohibited the rental of Federal Housing Administration Section 608 housing apartments to transients. This, despite the fact that at the time the particular project involved in the decision was completed and rented, there was nothing in the law prohibiting transient occupancy, since such occupancy was not prohibited until a 1954 amendment to the act. Justice Douglas, writing for the majority, admitted that there had been no express provision against transient occupancy in the original act but held that the limitation seemed fairly implied from the facts that: the legislation was passed to aid veterans and their families; the application forms from FHA covering estimates of annual operating expenses did not include expenses incident to transient accommodations, such as linen supply and cleaning; an FHA field office letter in 1951 pointed out that "transient occupancy is contrary to policy"; and, in general, the quality of permanency was implicit in the FHA

literature in 1947, particularly its booklet *Planning Rental Housing Projects. (Federal Housing Administration* v. *The Darlington, Inc.)*

COURT RULES STATE MORTGAGE TAX PAYABLE FOR FHA PROJECT

A developer of a large ($27,578,000) housing project financed with a Federal Housing Administration insured loan and built on leased land within the Plattsburgh air force base, sued for a refund of the $137,890 he had paid under protest to the county clerk of Clinton County, New York, as a mortgage tax under New York's tax law. The New York supreme court at special term held the tax was correct and, on appeal, the appellate division, in November 1958, affirmed the lower court *(In re Application of S. S. Silberblatt).* In its opinion, the appellate division held that the New York mortgage recording tax was not a property tax (exempt under the National Housing Act); that the mortgages recorded were not obligations of the United States; that the obligations were not instrumentalities of the government as beyond the taxing power of the state; and that it was immaterial that the United States upon completion of the project would become the owner of the capital stock of the mortgagor, since the test was the status at the time of recording.

FHLBB HAS RIGHT TO TAKE CONTROL OF LOCAL ASSOCIATION

The United States court of appeals for the third circuit has held that the Federal Home Loan Bank Board cannot be enjoined from the appointment of a conservator of a Federal Savings and Loan Association. The court, in a December 30, 1958 opinion, in *Greater Delaware Valley Federal Savings and Loan Association* v. *Federal Home Loan Bank Board,* said that Congress had made it clear that the board, in the exercise of its discretion, could take preliminary *ex parte* action.

"Finally, the opinion of the court below suggests that the allegation that the Board made a 'threat' to take over management and control of the affairs of the Association, unless certain steps should be taken to correct a situation viewed by the Board as dangerous and improper, charges a special impropriety which adds to the case for judicial intervention. But we cannot see how a threat of a party to follow a course can give a court greater power than an actual decision to adopt that course, or even action to implement such a decision. Indeed, this very point has recently been made in an indistinguishable situation by the Court of Appeals for the Fifth Circuit. *Miami Beach Federal Savings and Loan Association* v. *Callander,* 5th Cir. 1958, 256 F. 2d 410."

CONSTITUTIONALITY OF HOUSING CODE BEFORE U. S. SUPREME COURT

On October 20, 1958, the United States Supreme Court agreed to review a decision of the Baltimore criminal court in *Frank* v. *Maryland.* The court had held that the defendant was properly convicted of violating the Baltimore city code provision authorizing city health officers to inspect private homes without warrant and making it unlawful for a home owner or occupant to refuse to permit inspection.

The issue is an important one and has already been the subject of a state supreme court decision on the question of the constitutionality of the Dayton, Ohio housing code (see August-September JOURNAL, page 282). The question is simple to state and it is good that the Supreme Court will set at rest the question—which is: does municipal health inspection of private homes without warrant and over objection of the owner or occupant constitute unreasonable search and trespass, in violation of the 4th and 14th amendments of the United States constitution?

SUPREME COURT REFUSES REVIEW OF REDEVELOPMENT CASES

The April JOURNAL (page 134) carried a note on *Fellom, et al.* v. *Redevelopment Agency of the City and County of San Francisco,* in which case the district court of appeals of California had held that the California Community Redevelopment Law is not unconstitutional as applied to authorized condemnation for slum clearance purposes of non-slum type "blighted" areas or undeveloped vacant land in areas as designated. An appeal was taken to the United States Supreme Court. On October 27, 1958 the Supreme Court granted the motion to dismiss and dismissed the appeal for want of a substantial federal question.

The August-September JOURNAL (page 283) carried a note on the case of *Wilson, et al.* v. *City of Long Branch,* in which the New Jersey supreme court held that the New Jersey slum clearance statutes authorizing a municipality to declare an area to be "blighted" and authorizing, but not requiring, a municipality thereafter to acquire property in such an area by purchase or condemnation is a reasonable exercise of police power. An appeal was taken to the United States Supreme Court. On October 27, 1958 the Supreme Court denied certiorari.

NON-UNION CONTRACT UPHELD BY U. S. COURT ON BASIS OF LOW BID

An interesting point arose in the case of *Anthony P. Miller, Inc.* v. *Wilmington Housing Authority* in the district court of the United States for the district of Delaware.

Issue was whether the award by a municipality of a public works contract (a Wilmington housing authority job) to a non-union employer to be performed concurrently with a contract awarded to a union employer on the same project entitles the union employer to damages when a strike is called on the part of his union employees, which resulted in delaying the performance by the union employer.

The theory of the plaintiff was that the local authority was duty-bound not to award a contract to a non-union employer to be performed concurrently with an employer of union labor.

On August 8, 1958, as to this point, the court held for the local authority on the grounds that it would have been against public policy for the local authority to have awarded the contract to any but the low bidder merely because he was a non-union employer.

FALSE FHA APPLICATION DOES NOT FALL UNDER U.S. FALSE CLAIMS ACT

On May 26 the Supreme Court of the United States held that a lending institution's application for credit insurance under the Federal Housing Administration program is not a "claim," as that term is used in the False Claims Act. *(United States of America* v. *Howard McNinch, et al).* The court's conclusion was based on the fact that the False Claims Act is a criminal statute and must, therefore, be strictly construed and carefully restricted, not only in the light of the literal terms of the law but also of the evident purpose of Congress in using those terms. The court felt that, in

ordinary usage, an application for credit insurance would not be thought of as a claim against the government and cited with approval the language of the court of appeals opinion that "the conception of a claim against the Government normally connotes a demand for money or some transfer of public property." Justice Douglas dissented, holding that inducing the government to pledge its credit by a false claim is as much within the act as inducing it to part with its money or property.

U. S. COURT DENIES CLAIMS ON FHA IN DEFAULTED LOAN CASE

A construction company got a commitment from the Federal Housing Administration to insure a mortgage; an insurance company insured the loan; the project was built; the company defaulted on its payments; the insurance company acquired title by foreclosure, conveyed the fee simple title, and assigned the deficiency claim to FHA; FHA turned over its debentures to the insurance company, as well as a certificate of claim for $41,000; FHA operated the project for a couple of years and then sold it. When the smoke had cleared in all these transactions, it developed that FHA had some $28,000 available for payment on the insurance company's certificate of claim, a certificate that the insurance company executed, on the strength of which FHA paid the $28,000.

Both the original contractor and the insurance company sued FHA, the former claiming that FHA's accounting practices were not in accordance with correct accounting procedure and that, therefore, certain sums were returnable to the original borrower-contractor and the latter claiming that it was entitled to all of the excess, not merely the $28,000 covered by its certificate of claim.

In the United States district court for the eastern district of Missouri, both plaintiffs failed to prevail and this conclusion was affirmed by the United States court of appeals for the 8th circuit in its October 28, 1958 opinion in *Deal, et al. and Northwestern Mutual Life Insurance Company* v. *Federal Housing Administration.*

So far as the contractor-borrower was concerned, its principal argument was that they were entitled to the excess by virtue of a provision *(Continued column one, page 34)*

Box Score

HOUSING ACTS OF 1949, '54, '55

WORKABLE PROGRAM ACTIONS

Total number approved during November 1958: 19, bringing the total to 699 as of November 30.

Recertifications approved during November 1958: 25, bringing the total to 381, as of November 30.

Programs being processed, but not yet approved, during November 1958: *new*—187; *recertifications*—144.

Number of programs expired (no report on recertification), as of November 30, 1958: 42.

PROGRESS OF URBAN REDEVELOPMENT—URBAN RENEWAL

(As of November 30, 1958)

Projects by Current Status

	Capital Grant Reservations	Approved for Planning	Approved for Execution
Projects	569†	269	278
Localities	340*	209	179
Amount	$1,217,040,416	...	...

Financial Assistance Authorized for Projects

Planning Advances Authorized	Temporary Loans Authorized	Capital Grants Contracts Authorized
$45,972,736	$799,337,036	$611,227,838

†Includes ten completed projects in nine localities

*Smaller than the sum of components because cities have projects in more than one category. Locations are in 38 states, the District of Columbia, Hawaii, and Puerto Rico

Source: Urban Renewal Administration progress reports

PROGRESS OF PUBLIC HOUSING (HA '49, '54-'56)

(As of November 30, 1958)

Progress of Projects

	Under Annual Contributions Contracts*	Construction Started	Construction Completed
Units	82,164	30,510	228,034
Projects	350	214	1606
Localities	218	175	890

*Construction not started

Source: Public Housing Administration progress report

HOUSING ACT OF 1954 (SECTIONS 314, 701)

Section 314, Demonstration Grants

Total number of recipients October 30 to November 30: 0. The total remains at 27, including eight completed projects.

Section 701, Planning Assistance

Total number of recipients October 17 to December 25: 28, bringing the total to 187 as of December 25.

FEDERAL HOUSING ADMINISTRATION PROGRAMS

(Mortgages insured, Section 220, 221—Cumulative as of October 1958)

	Section 220		Section 221	
	New Housing	Existing Housing	New Housing	Existing Housing
Homes	943	8	2399	1212
Projects	38 (8146 units)	...	7 (1276 units)	...
Amount*	$102,807,350	$91,000	$32,388,550	$10,371,700

*Combined total, homes and projects

Source: Federal Housing Administration report of operations

TM

The following article is adapted from a paper prepared by Thomas R. Kelly, maintenance supervisor of the New Haven housing authority, for a New England Shirtsleeve Clinic last year. It is intended as a kind of guide to cutting maintenance costs through more efficient boiler operation.

BOILER WATER TREATMENTS—
here's the story on how and why to use them

Basic changes made in the past 20 years have created boiler maintenance problems that did not exist prior to 1935. For example, with a change of fuel from coal to "Bunker C" oil, the B.T.U. increases, with resultant greater stress on a heating system, causing metal failure. Also, today city water is being treated chemically. While the chemicals used are beneficial in that they purify water, they are harmful to heating system boilers. To alleviate the problem, practically all heating systems are being treated with some type of boiler water compound but, in the majority of cases, maintenance costs are beyond accepted figures and heating failures occur too often. The problem is corrosion, plus pitting, which increase fuel costs, deteriorate boilers, and rot return steam lines. When this condition exists, we all want to know what caused the condition and how we can prevent it from happening again.

Generally, the answer from the company that furnishes the boiler compound is that the condition is not caused by the chemicals used in the treatment, which may well be so. In isolated cases, the condition might be attributed to improper use of a treatment, which may have been too complicated to start with. When the problem is discussed with the boiler manufacturer, he shakes his head and presents an estimate for repair costs.

Function of Boiler Compounds

At this point, it might be well to emphasize that boiler compounds are employed to perform certain necessary, specific functions and, when wisely chosen and properly used, they will invariably produce the desired results. There is not, however, any known boiler compound, or other additive, that will perform as a cure-all or magical formula to compensate for a lack of sufficient operating know-how or that will serve to offset the damage that can result from an accumulation of sulphur-laden soot on the fire side of boiler tubes; from improperly adjusted burners; or from poorly maintained valves, traps, and strainers.

As in any job that involves a knowledge of chemistry, understanding the process of boiler water treatment is complicated. For large installations such as power plants that produce electricity or manufacturing concerns where steam is generated for various processes (makeup water over 50 per cent), a chemist is employed. He is responsible for water analysis and for specifying materials to be used in order to maintain proper chemical balance in the boiler water. Even so, it is improbable that one man can have all the answers and handle every problem. For this reason, these plant chemists have available to them, for consultation, either a chemist from the company selling boiler water treatment or a private boiler water consultant firm, employed on a retainer basis.

The Man in Charge

The average person responsible for the operation and maintenance of a low pressure steam or circulating water system is neither a chemist nor an engineer. The size of such installations does not warrant the full-time services of a chemist and laboratory costs for such a purpose would be prohibitive. The usual heating systems are closed, requiring very little makeup water. The operator is chiefly concerned with two aspects of the treatment of the boiler water: (1) is there sufficient treatment in the system and (2) is it doing the job? He should have an understanding of the chemicals used in the treatment, know the part each material plays in the process, and be informed as to why specific amounts of such materials are recommended. With the use of simple testing equipment, he wants to be in a position to treat the boiler water properly.

Most concerns selling boiler water treatment provide a no-charge service that consists of a complete laboratory water analysis report given bi-monthly. These reports show the complete condition of the water and changes in treatment can be made, if necessary. If an undesirable condition exists, it can be corrected within a maximum of two months and it is unlikely that serious damage could occur in such a short period of time.

Types of Treatment

Treatment of boiler water is classified as external or internal.

The external method consists of softening water with mechanical equipment before it enters the boiler water system. In softening water, an excess of oxygen is produced, which requires a chemical to act as an oxygen scavenger. This method is practical only for large

installations and requires the services of both chemists and engineers.

The internal method consists of treating with boiler compounds, added directly to the water system. This method is further classified as inorganic and organic.

The inorganic method consists of maintaining a chemical balance in the boiler water. Daily tests are required and various chemicals are added, depending on the test results. Treatment varies from day to day, which requires a considerable amount of time. With proper control, this method is satisfactory but serious damage to equipment can be caused if handled improperly.

The organic or colloid method might be described as a "package" process; a single compound is introduced into the water. It is most important to recognize that the compound will not damage the equipment if used in excess. The only drawback is the possibility of a waste of material. Testing can be made weekly and blow-down kept to a minimum.

The Chemistry of It All

City water contains certain mineral salts (calcium, magnesium, etc.). When water is heated to 160 degrees F, these salts separate from the water, settling on the tubes and other surfaces of a heating system. This formation is known as "scale" or "silica." It builds up in thickness, thus insulating the boiler against heat and retarding the flow of heat through the tubes. In addition to causing increased fuel costs, corrosive agents can develop inside the boiler and can cause serious damage.

As steam is generated, the salts are left in the boiler and the steam goes through the distribution lines and is returned to the boiler as distilled water. Water contains dissolved oxygen, which is responsible for pitting and corrosion, particularly in condensate return lines. If we consider our boilers as capable of making chemical changes by distillation, this dissolved oxygen in turn forms carbon dioxide. This gas liquifies and becomes carbonic acid, which is highly corrosive.

It is the dissolved acidic materials in the boilers and distribution system that cause pitting and corrosion. Checking the p^H (that is, acidity or alkalinity) on the return condensate will show if this corrosive condition exists in the system. A p^H of 7.5 or better indicates that the system is free of this undesirable condition, while a p^H of under 7.0 indicates that active corrosion is taking place. The average unit that is having trouble will show an acidic reading of 4.5-5.5 on steam condensate.

Bear in mind that p^H readings as to the acidity or alkalinity of a substance are measured on a scale of values that runs from 1.0 to 14.0, 7 indicating neutrality. Anything testing below 7.0 is acidic, anything over 7.0 is alkaline. Farmers test their soil in this manner and refer to the results in terms of soil being either sour or sweet. The p^H of boiler water should be between 11.0 and 11.5 at all times to prevent rust. The p^H of condensate return should always be between 7.5 and 9.0. An inexpensive litmus paper tester with a p^H scale reading from 1.0 to 14.0 may be purchased at any pharmaceutical supply house.

Organic Compounds

There are organic boiler compounds today that contain colloids, oxygen scavenger chemicals, and neutralizing amines in one product. The colloids dissolve scale and also provide a protective coating that acts as a rust preventative. Reducing agents contained in the product will absorb oxygen in the water. The amine will neutralize acid, while entering the system by vaporizing, keeping valves and traps clean. Maintaining a reserve of alkalinity will also absorb carbon dioxide. The undissolved solids will fall to the bottom of the boiler and will be eliminated by blowdown.

It might be well to note that any boiler compound with a colloidal and detergent action, when introduced into an old system will soften the scale in the boiler and return lines. Some of this scale will work through the lines and into the traps and strainers. They should be cleaned and blown down at frequent intervals until this condition has been cleared.

It should also be clearly understood that treating a system where corrosion has been evident will not show immediate results. The damage that has occurred can only be remedied by replacing the corroded parts but future corrosion will be eliminated. In some cases, a boiler tube or return line may be pitted to within one half of the thickness of the metal when the new treatment is introduced. When treated, conditions of this type can sometimes be arrested and the tubes may outlive the boiler; in other cases, the pitting may have so weakened the metal that replacement is necessary within the year. There is also the possibility that the detergent action of a treatment, when introduced, may loosen up the iron oxide holding old lines together and precipitate latent leaks that would eventually occur anyway, regardless of the action of any treatment.

In Summary . . .

Summing up, the most desirable features of any treatment are those that will prevent scale, pitting, and corrosion and have sufficient carryover to protect the supply and return lines, valves, and traps. The treatment must be harmless and must not attack metals or packings. It must not increase the dissolved mineral solids in the boiler and cause foaming or priming. It must maintain a p^H of between 11.0 and 11.5 in the boiler water and a p^H of between 7.5 and 9.0 in the condensate. It must be amenable to simple testing to determine both the p^H and whether or not sufficient treatment is in the system. These facts must be supported by periodical analysis (bi-monthly) and recommendations by the boiler compound manufacturer. Everyone concerned with the operation and maintenance of the system should be instructed and should understand how to make the necessary tests and how to treat the boilers in order to maintain the proper balance of treatment. Last, but not least, the boiler compound must be chosen not on the basis of price alone but on the basis of its ability to treat the boiler water satisfactorily at the lowest price per horse power, per year.

As a word of caution—any treatment that is introduced into a closed system without a carry-over and that is used to raise the p^H of the boiler water may, at the same time, affect the acidic condensate, continually nullifying the purpose of the treatment, thus proving both costly and harmful to the return lines. Another costly condition may arise from too frequent or unnecessary blow-down, carrying the treatment down the drain while, at the same time, requiring the addition of raw line make-up water to further dilute the treatment, with a resultant requirement for more and more treatment.

New Maintenance Products

JOH-J1—AQUATIC MOUSETRAP

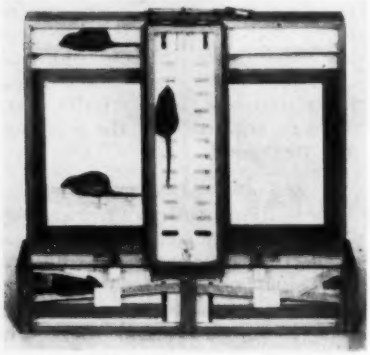

The *Self-Sett Mousetrap*, says its manufacturer, is two up on the Pied Piper of Hamelin. Where the old gent fluted to lure his mice into the sea, this trap's design works to drown the pests in 2½ quarts of water and lets them do all the work themselves. The unit's claims to "better mousetrap" fame center on (1) its high volume catching capability—over 100 rodents per setting; (2) quick and sanitary assembly and disassembly; and (3) its corrosion-resistant construction.

The picture above tells the *Self-Sett Mousetrap* story. First, the water chamber is filled; the bait is inserted and entrance-hole doors are set in the "open" position. Along comes a mouse; he smells the hidden food and enters the hole . . . thereby tipping a seesaw-like ramp that seals off the entrance. Not only food odors, but a pinpoint of light lure the rodent up a ladder and onto the upper ramp. Here, its weight tips the ramp sideways and the pest is dropped into the water tank, where it drowns. The quick dispatching of rodents works up to 102 times per setting, says the manufacturer.

The next step—removal of bodies—is said to be easy: it takes five seconds to disassemble the trap . . . without need to touch any part that has come in contact with mice. Each trap is a duplex structure, with self-setting entrances and other components built into each separate unit. Fabricated from a special corrosion-resistant metal to keep the balanced parts working smoothly and free of rust, the trap is 15½ inches by 15 inches and weighs 12 pounds.

JOH-J2—STONE, MASONRY CLEANER

All that glitters may not be gold . . . sometimes the sparkle may come from cleaned-up-like-new stone and masonry after an application of *K-35*. *K-35* is the space-age sounding name of a new "miracle" liquid cleaner, said to be geared to modern cleaning requirements for walls made of natural stone or for use on man-made masonry. Says the manufacturer: *K-35* is cheaper; faster-working; easier to use—it's brushed on, rinsed off with water; and safer than old-fashioned methods of blasting with sand or hot steam.

A chemical cleaner, *K-35* cuts through dirt, oil, and rust without "eating" out stone surfaces as is the case with blasting or acid washings. And, points out the firm, surfaces are left as clean as when originally installed. *K-35* can be applied to such materials as granite, marble, sandstone, or slate, as well as to artificial building materials ranging from brick and cement to stucco, tile, porcelain enamel, and terra cotta.

Cost-wise, cleaning with *K-35* runs about a cent and a half per square foot of area cleaned; one gallon cleans from 600 to 800 square feet.

JOH-J3—REFUSE COLLECTOR

With the *Dempster-Dumpmaster CA-15-18DB*, it is now possible for average-size, scattered-site, and even small housing projects to get in on the benefits of a modern refuse collection system that was formerly feasible only with larger rubbish disposal operations.

That's the word from Dempster Brothers, manufacturers of two basic rubbish collection systems. One—the *Dumpster* system—involves large rubbish containers into which refuse is dumped. When full, the containers are picked up by specially-equipped trucks, placed on the truck platform, and hauled away to be dumped. A second version—the *Dumpmaster* system—features the dumping of container contents into the truck's body. Containers are then replaced and the refuse is trucked away.

The *CA-15-18DB* is a modification of the *Dumpmaster* system . . . modified to meet the requirements of low-cost, smaller-volume collection operations. Containers are available with capacities of 1, 2, and 3 cubic yards; one type, of low loading height, is designed to be carried on the truck lifting arms. It receives garbage dumped manually from conventional trash cans laid out along collection routes.

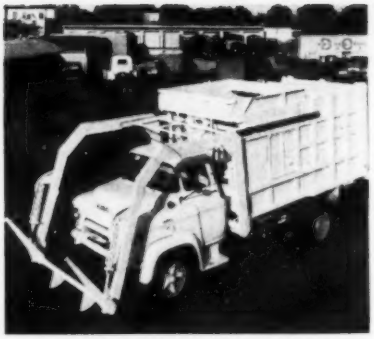

The truck has a capacity of 72 cubic yards of refuse in its 18-cubic yard body, made possible by a built-in mechanism for compressing loose refuse to one-fourth its size.

JOH-J4—ALLOY FAUCET SEAT

Monel—an alloy "toughie" said to be the standard metal used in water meters, flush valves, and other units subject to continuous corrosive action—is the "hero" behind the success of Sexauer's new *Full Saddle Seat*. The removable faucet seat is billed by its manufacturer as the best answer yet to corrosion and wear . . . due mainly to the tough qualities of Monel, a metal considered expensive in terms of initial outlay, but cheap in terms of long-term maintenance.

The firm's view is that faucet problems are traceable to seats that rust due to chemicals and impurities in water. Resulting deterioration of both seats and other faucet parts means high water and fuel bills brought on by leaking, dripping units. Hence, to effect savings all-around, Sexauer has come up with the *Full Saddle Seat* made from a nickle-copper alloy that's said to be "outstandingly resistant" to water's corrosive agents, as well as general faucet wear and tear.

Available in 10 models for different makes and sizes of faucets, the seat is also said to turn up additional advantages. They include: (1) less grooving and chewing-up of washers due to the *Full Saddle Seat's* large, smooth seating area; (2) less wear on threads, stem, and washer due to a positive seal with less pressure.

New Construction Products

JOH-J5—WALL-MOUNTED TOILET

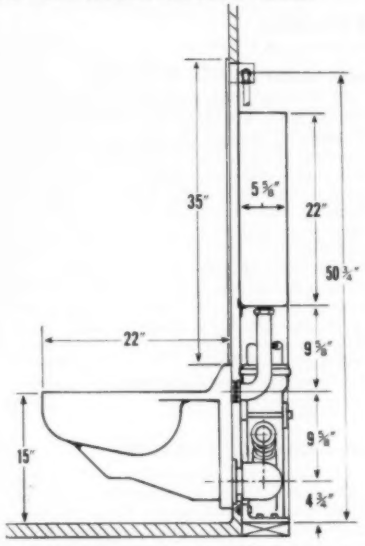

Off-the-floor construction for easy cleaning around and under the toilet bowl; a concealed water tank to minimize tenants' tinkering with internal works; space savings on bathroom floor and wall... that's the *Walsan*. A wall-mounted toilet, it's slated to bring joy to housewives and maintenance men, says the manufacturer.

Designed as the answer to housewives' complaints about the difficulty of cleaning bathroom floors around conventional closets, the *Walsan* is said to turn this chore into a snap. The easy-to-reach-under unit makes for general cleaning and mopping ease. Concealment of the water tank in the wall likewise makes for maintenance happiness, notes the firm. It works like preventive maintenance: concealment solves many problems by preventing kids and grownups from tinkering with water closet works. When tank troubles do develop, a snap-on steel panel is easily removed to open the way for repair work. As to space savings, *Walsan's* "hidden" tank frees 6 inches of floor space for other uses.

Other *Walsan* features: a vitreous china bowl available in seven colors and white; a handle for flushing the toilet, built into the bowl; the steel tank is insulated to prevent condensation. The panel covering the tank is 12 inches by 35 inches and can be decorated to match bathroom walls. *Walsan's* off-the-floor mounting is made possible by a cast-iron fitting that serves both to support the unit and to pipe off wastes. The fitting, in turn, is fastened to a plate mounted on the wall studding.

JOH-J6—TERMITE-VAPOR BARRIER

Termite protection, ant protection, and a vapor barrier all combined in one low-cost product sounds like a builder's dream . . . but it's the real thing: it's *Termibar*. Here are the elements in *Termibar* that work together to achieve the three-way protection: (1) Dieldrin, an insecticide that kills termites and ants, is impregnated onto a layer of (2) felt, which is then factory-bonded to a (3) polyethylene film. The felt, having absorbed the insecticide, serves as a pest repellant, while the plastic film works to hold off ground vapor.

Termibar is designed for use in slab-on-ground construction, for crawl spaces, and around expansion joints. On its insect-killing side, *Termibar* is said to work in two ways: it renders the soil beneath the barrier toxic to the havoc-wrecking pests or kills them on contact with the insecticide. The insecticide is said to meet specifications of the United States Department of Agriculture for the treatment of ground areas. The plastic film is said to meet federal specs for vapor permeability.

Manufactured in rolls 6 feet wide by 91 feet long, *Termibar* is laid in paralleling strips with 6-inch overlays. Neither skilled labor nor specialized equipment are required for applying *Termibar*.

Check and Mail . . .

Check the "JOH" numbers below that match the items on pages 32 and 33 on which you would like full technical literature. Then send the coupon to the JOURNAL OF HOUSING, 1313 East 60th Street, Chicago 37, Illinois.

NEW MAINTENANCE PRODUCTS

- ☐ JOH-J1—Aquatic Mousetrap
- ☐ JOH-J2—Stone, Masonry Cleaner
- ☐ JOH-J3—Refuse Collector
- ☐ JOH-J4—Alloy Faucet Seat

NEW CONSTRUCTION PRODUCTS

- ☐ JOH-J5—Wall-Mounted Toilet
- ☐ JOH-J6—Termite-Vapor Barrier

FREE LITERATURE

- ☐ JOH-J7—Insect Control
- ☐ JOH-J8—Visualization Made Easier
- ☐ JOH-J9—Painting Asbestos-Cement Products

SEND TO:

NAME .....

HOUSING AFFILIATION .....

POSITION TITLE .....

ADDRESS .....

Free Literature

JOH-J7—Insect Control, 32 pp., illus.

Divided into two parts, this booklet covers (1) theory behind research on insects and insecticides and (2) an extensive cataloging—12 pages—of some 120 of the most common pests. The catalog illustrates insects and lists their identifying characteristics, damage effects, life stages and cycles, reproduction rates, habitats, and methods of control.

JOH-J8—Visualization Made Easier, 32 pp., illus.

This booklet shows the easy way to make graphs, organization charts, layouts, overlays, plus a wide variety of visual aids, through use of pressure-sensitive tapes of many sizes, colors, and patterns. Included are step-by-step directions for use of the tapes and a listing of accessories for carrying out related jobs. Booklet also indexes prices.

JOH-J9—Painting Asbestos-Cement Products

A manual—first one ever issued on the subject, says an industry release—it covers types of paints used on asbestos-cement products, advantages of each paint type and surface preparation. Also included: recommended procedures for the application of paint on asbestos-cement flat and corrugated sheets, siding, and roofing shingle.

COURT DECISIONS—

(Continued from page 29)

in the National Housing Act (Section 207 (h)) that provided that any excess remaining after payment to the holder of a certificate of claim "shall be paid to the mortgagor of such property." This language was in the law at the time the mortgage was insured, although it is no longer in the law, having been deleted in 1948. The court threw out this argument, pointing out that it was not true that a contract would be implied because the statute became a part of the contract. For the statute to be read as if it were part of the contract, the contract itself must carry language to this effect and, in this case, no such language appeared in the contract. The court was satisfied that there was no intention in Congress to create a private contractual right.

As to the insurance company's claim, the court was unimpressed with the contention that its accord and satisfaction were without consideration. Furthermore, the insurance company's contention that the accord and satisfaction were not binding because it was entered into by mutual mistake of fact was also dismissed.

U. S. DISTRICT COURT DISMISSES ALABAMA SEGREGATION CASE

In the case of *Tate, et al.* v. *City of Eufaula, Alabama, et al.*, the plaintiffs named the city of Eufaula, the local housing authority, and the executive director thereof as defendants. The suit, brought under the equal protection and due process clause of the 14th amendment of the constitution and the Federal Civil Rights Act, asserts racial discrimination in the Flake Hill redevelopment project financed under Title I of the Housing Act of 1949 and also charges discrimination in low-rent public housing projects, together with allegations that the urban redevelopment and the public housing projects have the further effect of promoting segregation in parks, schools, and other public facilities. The plaintiffs are members of the Negro race who own property within the boundary lines of the redevelopment project area. The complaint asked for injunctive relief and for a declaratory judgment.

Defendants—the city and the local housing authority—moved to dismiss the complaint, relying mainly on four grounds: (1) lack of jurisdiction, (2) no present justiciable controversy, (3) failure to state a claim, and (4) absence of certain indispensable parties.

In the memorandum opinion filed on August 5, 1958, the United States district court dismissed the action, holding the complaint to be insufficient insofar as stating a cause of action and alleging a presently existing and genuine justiciable controversy.

The court, noting the complete lack of proof of any unconstitutional or illegal action by defendants, said: "There are no facts or circumstances averred, or even inferred, to justify plaintiffs' conclusion as to a 'tactic understanding' between these defendants and others to discriminate against them because of their color. There

(Continued column one, page 36)

Personnel Exchange

POSITIONS AVAILABLE

A82—NEIGHBORHOOD ORGANIZER

City in the 100,000 population class, with an established program of community organization, is seeking an experienced neighborhood organizer. Candidate, preferably male, will work with the program of citizen participation involving neighborhood study and action committees operating on a city-wide basis through a central organization. Degree is required and experience is essential. Salary: $5750 to $6920 depending on experience.

A83—RENEWAL DIRECTOR

A position as director of urban renewal is available in Sunnyvale, California. Candidate is to work under the city manager (executive director) to coordinate redevelopment agency renewal activities leading to a federal planning advance to study a 30-acre project and then to guide it through execution. All services, except appraisals and economic analysis, will be contracted between the agency and city. Qualifications: minimum of one year's experience with a federal, state, or local renewal agency, or its equivalent; degree in public or business administration, or equivalent. Salary is open. Apply before February 2 to: City Manager's Office, City Hall, 456 West Olive, Sunnyvale, California.

A84—MANAGEMENT AIDES

The Los Angeles housing authority is recruiting candidates for management aide positions. Duties include social service work in project offices; interviewing, handling new-tenant applications; tenant relations counseling; and some work with other agencies. Starting salary is $4836 per year, with a top of $6036 and the opportunity for promotion into project management. Requirements: degree and a major in social sciences; three years' experience in office work, interviewing, or social work. Experience in public housing management preferred. Apply: Housing Authority of the City of Los Angeles, P.O. Box 2316 Terminal Annex, Los Angeles 54, California.

A85—CONFERENCE DIRECTOR

The Hyde Park-Kenwood Community Conference (see James V. Cunningham "Personal," page 3), is seeking an executive director to head its program dealing with conservation, urban renewal, and human relations. Qualifications call for training and/or experience in fields of community organization or social welfare generally. Ability to deal with public officials and agencies, as well as the community, is essential. Salary: $7500 to $9000, depending on experience, background. Apply in detail by letter to the Hyde Park-Kenwood Community Conference, 1307 East 53rd Street, Chicago 15, Illinois. Direct to attention of conference personnel committee.

A86—RENEWAL DIRECTOR

The city of Waterbury, Connecticut (population 100,000) is recruiting for an urban renewal director to head its redevelopment program. Qualifications: degree in planning, municipal administration, or related field; two years' experience in urban redevelopment or planning. Salary is open. Apply: Cyril Dunphy, Chairman, Urban Redevelopment Commission, 9 Glenridge Street, Waterbury, Connecticut.

POSITIONS WANTED

W34—MALE, 28—COMMUNITY ORGANIZATION

Candidate's background includes varied paid and volunteer experience with settlement house, neighborhood improvement, and citizen participation programs. Specific experience: setting up community improvement workshops for a Catholic settlement house; work on neighborhood group youth programs and fund-raising campaigns; presently directs block organization activities for a 4000-member community conference. Candidate has represented the conference nationally and locally and has had experience in newspaper and magazine article writing. A Korean veteran, candidate is married; has B.S. degree.

PROFESSIONAL DIRECTORY

SOIL TESTING SERVICES, INC.

Consulting Engineers

John P. Gnaedinger — Carl A. Metz
Clyde N. Baker, Jr. — C. J. Aimi

Soil investigations, engineering reports, inspection, foundation design

1827 N. Harlem, Chicago, 35
San Francisco;
Kenilworth, New Jersey;
Havana, Cuba; Milwaukee, Wisconsin;
Portland, Michigan

LEO A. DALY

and Associates

ARCHITECTS - ENGINEERS - PLANNERS

San Francisco, California
49 Maiden Lane

Omaha, Nebraska
Insurance Building

Seattle, Washington
Securities Building

St. Louis, Missouri
3207 Olive Street

CANDEUB & FLEISSIG

Urban Renewal
C.B.D. Studies
Master Planning
Economic Base Analyses

32 Green Street, Newark, New Jersey
Albany, New York
Springfield, Massachusetts
Scranton, Pennsylvania
San Francisco, California

PLANNING AND RENEWAL ASSOCIATES

Offering a complete range of professional services in community planning, traffic engineering and urban renewal.

18 ELIOT STREET
CAMBRIDGE 38, MASSACHUSETTS
UNIVERSITY 8-7300
15 WESTERN AVENUE
AUGUSTA, MAINE

MORTON HOFFMAN

Urban and Economic Consultant
URBAN RENEWAL • HOUSING

Community Renewal Programs, Downtown Surveys, Economic Analysis, Market Studies, Research

MORRIS BLDG. BALTIMORE 1, MD.
LExington 9-1002

HARLAND BARTHOLOMEW AND ASSOCIATES

Saint Louis, Missouri
317 North Eleventh St.

Memphis, Tennessee
188 Jefferson Street

Atlanta, Georgia
120 Marietta Street

Honolulu, Hawaii
925 Bethel Street

JAMES O. YARGER AND ASSOCIATES

Personnel and Management Services

Classification and Salary Plans

Experienced in

Urban Renewal and Public Housing

309 Walnut St. • Falls Church, Va.

REAL ESTATE RESEARCH CORPORATION

• URBAN RENEWAL •

73 WEST MONROE STREET
CHICAGO 3
CEntral 6-3525

VILICAN-LEMAN & ASSOCIATES

PLANNING CONSULTANTS

Comprehensive City Planning • Redevelopment & Conservation Projects • Housing Condition Studies • Community Facility & Housing Project Site Planning

29621 Northwestern Highway
Elgin 6-8181
Birmingham, Michigan

JACOB L. CRANE

World-wide Personal Consultation

Annapolis, Maryland, U. S. A.

URBAN RENEWAL

SURVEYS • PLANNING • REHABILITATION

LEONARD WAYMAN ASSOCIATES

11 S. LaSalle St., Chicago 3 • Financial 6-4661

STEELE & ASSOCIATES, INC.

CORROSION ENGINEERS

Specialists in Underground Utility Corrosion Control. Utility Construction Specifications. Periodic Inspections. Cathodic Protection.

1008 CRESCENT AVE. N.E.
ATLANTA 9, GA.

THE JOURNAL OF HOUSING
Published by
The National Association of Housing and Redevelopment Officials
1313 East 60th Street, Chicago 37

•

Return postage guaranteed

COURT DECISIONS—

(Continued from page 34)

are no facts or circumstances averred to justify plaintiffs' conclusion as to a 'scheme or design' on the part of the defendants to use the urban redevelopment program to discriminate against these plaintiffs, and others similarly situated, because of their color."

With respect to the plaintiffs' prayer for discontinuing the alleged policy of segregation in operating low-rent public housing projects, the court stated: "The allegations regarding the 'policy, custom and usage' by defendants concerning the Western Heights Project and the Chattahoochee Court Projects are mere surplusage, since there is no allegation anywhere in the complaint that any of the plaintiffs or any other eligible Negroes have been refused admission to the Western Heights Project because of their color. Indeed, it does not even appear that they are eligible, and if we were to assume that they were, nothing concerning such an application is averred. Such an application would be necessary."

As viewed by the court, the plaintiffs sought injunctive relief based on the apprehension that the defendants might, in the future, perform some illegal act. The court declined to declare or enjoin upon such future contingencies, stating that the presumption is that the defendants, who are public officials, will refrain from any illegal or unconstitutional acts and will carry out the urban redevelopment project in a lawful manner. In completing the urban redevelopment project, the court emphasized that the public officials involved must comply with the existing law, which is clearly to the effect that "there can be no governmentally enforced segregation solely because of race or color," citing decisions relating to public housing, schools, and public recreational facilities.

"COLLAPSIBLE CORPORATION" CITED IN FHA LOAN "PROFITS" CASE

Another decision holding that the distribution of unused proceeds of a mortgage loan insured by the Federal Housing Administration went to a "collapsible corporation," was handed down by the United States tax court in *August* v. *Commissioner*, on July 31, 1958 (for earlier decision, see May JOURNAL, page 171).

PROFIT, LOSS NOT RELEVANT IN SETTLEMENT OF GI LOAN DEFAULTS

Arthur McKnight, a veteran, got a loan of $6750 from a building and loan association and applied for and received a Veterans Administration guarantee of 50 per cent of the loan. A short time later, McKnight defaulted; the association elected to foreclose and received one-half of the $6750, or $3375, from the VA; and the property was bid in by the association at the VA's upset price of $5500. The association gave McKnight credit for the VA's $3375 and, after crediting the sale of $5500, turned over to the VA the excess of $1921.36. The VA applied this excess to the $3375 it had paid the association and sued McKnight for the remaining loss of $1453.64, plus interest at 4 per cent.

McKnight contended that developments showed that since the VA acquired the property from the association for a total of $7047.50 and sold it for a net of $6631.88, it had suffered a loss of only $415.62.

No, said the United States court of appeals for the 9th circuit in its September 22, 1958 opinion in *McKnight* v. *United States of America*. The VA regulations and the application for guarantee form filled out by McKnight throw this case squarely within the settled principles of indemnity law. This means that the "guarantor's loss is fixed at the time of the trustee's sale. The subsequent events on which defendant here relies can neither decrease nor increase the extent of his obligation to indemnify."